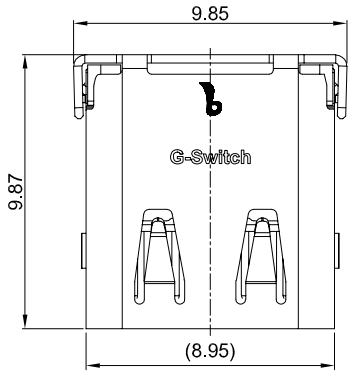

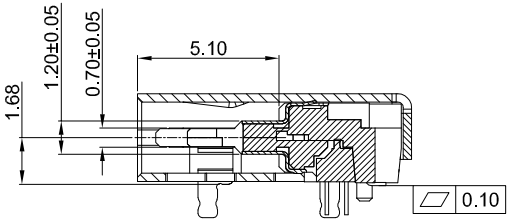

SECTION B-B

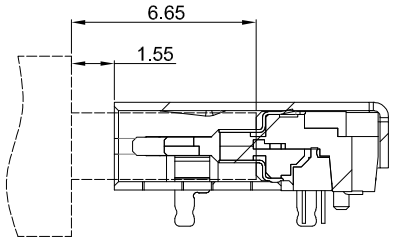

AFTER MATING

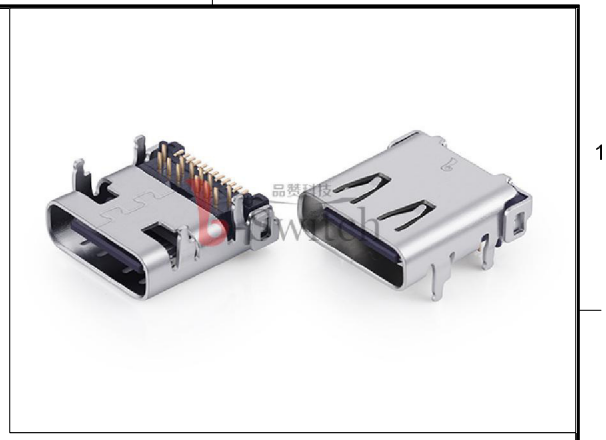

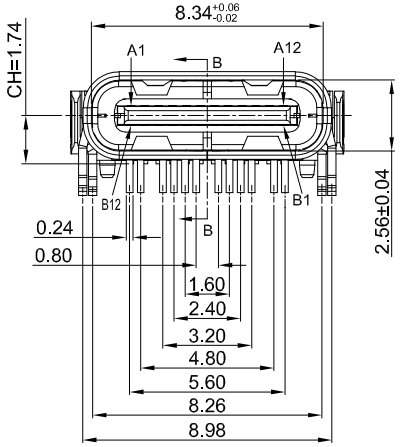

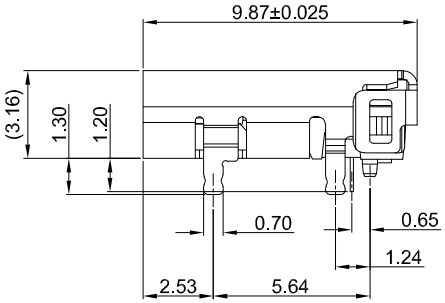

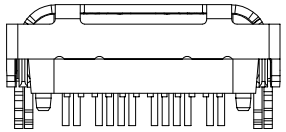

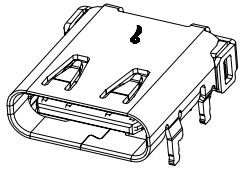

G-Switch USB-C Specification:

1.Current rated: 5A on vbus/1.25A
on vconn/0.25A on other
Voltage rating: 24V AC
2.Withstanding voltage: 100V AC/minute
3.Contact resistance: 40mΩ Max
4.Insulation resistance: 100MΩ Min
5.Operating temperature: -40°C ~ +85°C
6.Mating force: 5N~20N
7.Unmating force: 8N~20N
8.Durability cycle:10,000 cycles
9.Compliant with:IEC62680-1-3

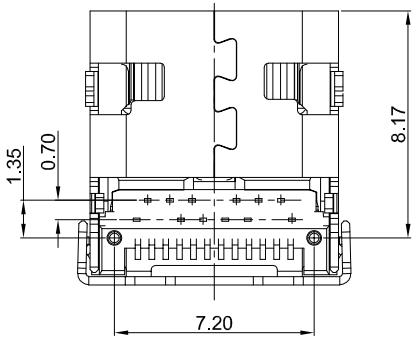

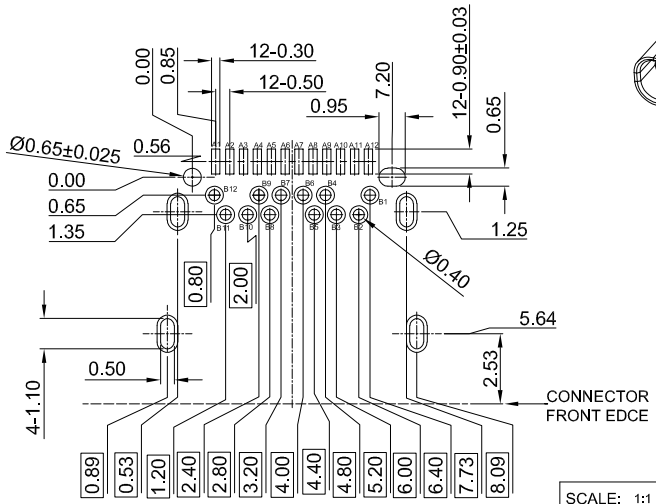

RECOMMENDED PCB LAYOUT
TOLERANCE:±0.05

GT-USB-9003A	LCP
GT-USB-9003A03	PA

USB IF
TID:11923

A1	A2	A3	A4	A5	A6	A7	A8	A9	A10	A11	A12
GND	TX1+	TX1-	VBUS	CC1	D+	D-	SBU1	VBUS	RX2-	RX2+	GND
First	Second	Second	First	Second	Second	Second	Second	First	Second	Second	First

B12	B11	B10	B9	B8	B7	B6	B5	B4	B3	B2	B1
GND	RX1+	RX1-	VBUS	SBU2	D-	D+	CC2	VBUS	TX2-	TX2+	GND
First	Second	Second	First	Second	Second	Second	Second	First	Second	Second	First

NO.	PARTS	MATERIAL	REMARKS
1	SHELL	STAINLESS STEEL	Ni30u"Min PLATED
2	GND PLATE	STAINLESS STEEL	CLEAN
3	MID PLATE	STAINLESS STEEL	Ni30u"Min PLATED
4	HOUSING	HIGH TEMPERATURE PLASTIC	PA BLACK OR NATURAL UL 94V-0
5	TERMINALS	COPPER ALLOY	Au1u" PLATING ON CONTACT AREA

Pb Process Capable

RoHS Compliant EU RoHS Standards

HALOGEN Compliant Halogen Free

SCALE: 1:1 | UNIT: mm
SIZE: A4

Unless otherwise General Tolerance:

X.x	±0.30
X.xx	±0.20
X.xxx	±0.10
X°	±10°
X.x°	±8°

Title: Horizontal Type-c 24P Female SMT+DIP CH=1.74 L=9.87mm

Molde Code: GT-USB-9003A03

DRAWN	CHECKED	APPROVED	DATE
Xia	Chen	Chen	2023.02.01

品赞科技 G-Switch ®
www.dg-switch.com

REV: A0 | SHEET: 1/1

EN/SASO IEC 62680-1-3 Test Report

25B01N000385-002-COM

For

Type-C Receptacle Connector

Company Name: G-Switch Technology (Dongguan) Co., Ltd.

Product Name: Horizontal Type-c 24P FemaleSMT+DIP

CH=1.74 L=9.87mm

Model Name: GT-USB-9003

Hardware Version: A0

Issued Date: 2025-03-10

Note:

The test results in this test report relate only to the devices specified in this report. This report shall not be reproduced except in full without the written approval of SAICT.

Test Laboratory:

SAICT, Shenzhen Academy of Information and Communications Technology

Building G, Shenzhen International Innovation Center, No.1006 Shennan Road, Futian District, Shenzhen, Guangdong, P. R. China 518000.

Tel:+86(0)755-33322000, Fax:+86(0)755-33322001

Email: yewu@caict.ac.cn. www.saict.ac.cn

REPORT HISTORY

Report Number	Revision	Description	Issue Date
25B01N000385-002-COM	V1	First release	2025-03-10

Note: the latest revision of the test report supersedes all previous versions.

CONTENTS

1. Test Laboratory

1.1. Testing Location

Location：SAICT

Address: Building G, Shenzhen International Innovation Center, No.1006 Shennan Road, Futian District, Shenzhen, Guangdong, P. R. China 518000

1.2. Testing Environment

Normal Temperature:	15-35℃
Relative Humidity:	25-85%RH
Atmospheric pressure	86-106kPa

1.3. Project Data

Testing Start Date: 2021-10-27 Testing End Date: 2022-01-18

1.4. Signature

Su Kun	Wang Yang	Wei Ming
Prepared this test report	**Reviewed this test report**	**Approved this test report**

2. Client Information

2.1. Applicant Information

Company Name：	G-Switch Technology (Dongguan) Co., Ltd.
Address：	Room 701, Building 2, OFILM film Industry Research Center, No.2 Huahai Road, Binhai Bay New Area, Dongguan City, Guangdor
City：	Dongguan
Country：	China
Email：	feng@g-switch.cn
Telephone：	0769-82388879

2.2. Manufacturer Information

Company Name：	G-Switch Technology (Dongguan) Co., Ltd.
Address：	Room 701, Building 2, OFILM film Industry Research Center, No.2 Huahai Road, Binhai Bay New Area, Dongguan City, Guangdor
City:	Dongguan
Country：	China
Email：	feng@g-switch.cn
Telephone：	0769-82388879

3. Unit Under Test (UUT) Information

3.1. About UUT

Description:	USB 3.2 Type-C Receptacle Connector
Brand Name:	G-Switch Technology (Dongguan) Co., Ltd.
Marking Name:	Horizontal Type-c 24P FemaleSMT+DIP CH=1.74 L=9.87mm
Material Code:	GT-USB-9003
Hardware Version:	A0

3.2. Sample Coding

Test Group	Number of Plug/Receptacle	Qty of Specimen
Group A-1	A1-1 to A1-5	5 pcs
Group A-2	A2-1 to A2-5	5 pcs
Group A-3	A3-1 to A3-5	5 pcs
Group A-4	A4-1 to A4-10	10 pcs
Group A-7	A7-1 to A7-5	5 pcs
Group B-1	B1-1 to B1-8	8 pcs
Group B-5	B5-1 to B5-3	3 pcs
Group B-6	B6-1 to B6-3	3 pcs

4. Reference Documents

1. EN IEC 62680-1-3:2022, Universal serial bus interfaces for data and power_Part 1-3Common components-USB Type-C(r) cable and connector specification
2. SASO IEC 62680-1-3:2023, Universal serial bus interfaces for data and power-Part 1-3: Universal Serial Bus interfaces-Common components- USB Type-CTM cable and connector specification

Note:The requirements of the standards SASO IEC 62680-1-3 is the same as EN IEC 62680-1-3.

5. USB Type-C Compliance Requirements

5.1. DC Electrical

Clause	Test Item	Test Procedure	Requirement
3.7.8.1	Low Level Contact Resistance (LLCR)	EIA 364-23 The low level contact resistance (LLCR) measurement is made across the plug and receptacle mated contacts and does not include any internal paddle cards or substrates of the plug or receptacle. The test boards shall be provided with the connectors to be tested. • Measure at 20 mV (max) open, circuit at 100 mA.	The following requirements apply to the power and signal contacts: • 40 mΩ (max) initial for VBUS, GND and all other contacts. • 50 mΩ maximum after initial measurement.
3.7.8.2	Dielectric Withstanding Voltage	EIA 364-20 Applicable to both receptacle and plug. • Measurement per Method B.	The dielectric shall withstand 100 VAC (RMS) for one minute at sea level after the environmental stress defined in Table 4-8, Test Group A-7.
3.7.8.3	Insulation Resistance	EIA 364-21 Applicable to both receptacle and plug. See Table 4-8 Test Group A-7.	A minimum of 100 MΩ insulation resistance is required between adjacent contacts of unmated and mated connectors.
3.7.8.4	Contact Current Rating	A current of 5 A shall be applied collectively to VBUS pins (i.e., pins A4, A9, B4, and B9) and 1.25 A shall be applied to the VCONN pin (i.e., B5) as applicable, terminated through the corresponding GND pins (i.e., pins A1, A12, B1, and B12). A minimum current of 0.25 A shall also be applied individually to all the other contacts, as applicable.	The temperature rise of the outside shell surface of the mated pair above the VBUS and GND contacts shall not exceed 30ºC above the ambient temperature.

5.2. Mechanical

Clause	Test Item	Test Procedure	Requirement
3.2.1	Critical Dimensions	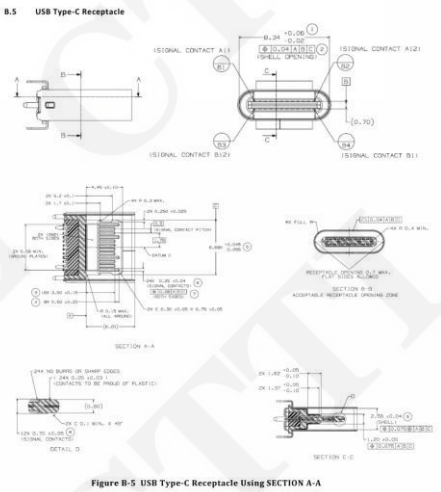 Figure B-5 USB Type-C Receptacle Using SECTION A-A	Table B-5 Receptacle Critical Dimensions for Receptacles Using SECTION A-A in Figure B-5 1. Receptacle inside opening: 8.34; +Tol. 0.06; -Tol. 0.02 2. Receptacle insider opening position tolerance: 0.04 with datum A/B/C; +Tol. n/a; -Tol. n/a 3. Receptacle signal pin length: 3.50; +Tol. 0.15; -Tol. 0.15 4. Pin length delta: 0.50; +Tol. 0.20; -Tol. 0.20 5. Tongue width: 6.690; +Tol. 0.045; -Tol. 0.055 6. Contact width: 0.25; +Tol. 0.04; -Tol. 0.04 7. Contact width position tolerance: 0.08 with datum A/B/C; +Tol. n/a; -Tol. n/a 8. Tongue thickness: 0.70; +Tol. 0.05; -Tol. 0.05 9. Receptacle inside thickness: 2.56; +Tol. 0.04; -Tol. 0.04 Notes: 1. All values are in millimeters.
3.8.1.1	Insertion force	EIA 364-13 The insertion force test shall be done at a maximum speed of 12.5 mm (0.492") per minute.	Within the range from 5 N to 20 N. This requirement does not apply to the plugs that are used for direct docking without a cable.
3.8.1.2	Extraction force	EIA 364-13 The extraction force test shall be done at a maximum speed of 12.5 mm (0.492") per minute.	Within the range of 8 N to 20 N, measured after a preconditioning of five insertion/extraction cycles (i.e., the sixth extraction). After an additional twenty-five insertion/extraction cycles, the extraction force shall be measured again (i.e., the 32nd extraction) and the extraction force shall be within: a) 33 % of the initial reading, and b) within the range of 8 N to 20 N. The extraction force shall be within the range of 6 N to 20 N after 10,000 insertion/extraction cycles. This requirement does not apply to the plugs that are used for direct docking without a cable.
3.8.1.3	Durability	EIA 364-09	10,000 cycles minimum. Low level contact resistance and dielectric withstanding voltage shall be checked to be within spec after the 10,000 durability cycles according to Table 4-8, Test Group A-7.
3.8.1.6	4-Axis Continuity	See Appendix D for detailed test fixtures and procedures. Plug and Receptacle: Subject the mating interface to the moments defined in appendix D for at least 10 seconds.	No discontinuities greater than 1 microsecond duration in any of the four orientations tested.

5.3. Environmental

Clause	Test Item	Test Procedure	Requirement
3.8.2	Temperature life	EIA 364-17, Method A. 105º C without applied voltage for 120 hours. 105º C without applied voltage for 72 hours when used as preconditioning.	Low level contact resistance meets spec before and after the Temperature Life test.
3.8.2	Vibration	EIA 364-28 Test Condition VII, Test Letter D	No evidence of physical damages and no discontinuity longer than 1 microsecond. Low level contact resistance meets spec before and after the Vibration test.
3.8.2	Cyclic temperature and humidity	EIA 364-31	Low level contact resistance meets spec before and after the Cyclic Temperature and Humidity test.
3.8.2	Thermal shock	EIA 364-32, Test Condition I 10 Cycles –55°C and +85°C.	No evidence of any physical damage. Low level contact resistance meets spec before and after the Thermal Shock test.
3.8.2	Mixed flowing gas	EIA 364-65,Class II A Samples should be placed in an environmentally controlled 'test chamber' that is monitored by a gas analyzing system for controlled concentrations of the specified gas mixture. Test coupons shall also be used and the weight gain reported. Test duration is 7 days.	Low level contact resistance meets spec before and after the Mixed Flowing Gas test.
3.8.2	Thermal disturbance	Cycle the connector or socket between 15 °C ±3 °C and 85 °C ± 3 °C, as measured on the part. Ramps should be a minimum of 2 °C per minute, and dwell times should insure that the contacts reach the temperature extremes (a minimum of 5 minutes). Humidity is not controlled. Perform 10 such cycles.	Low level contact resistance meets spec before and after the Thermal disturbance test.

6. Test Procedure

For the DC electrical, Mechanical and Environmental compliance requirements of Type-C connector, refer to the grouping and test methods in the EIA364.1000.01 standard to implement the test.

Group A-1	
No.	**Test Item**
A-1-1	Low level contact resistance
A-1-2	Durability (preconditioning)
A-1-3	Temperature life
A-1-4	Low level contact resistance
A-1-5	Re-seating
A-1-6	Low level contact resistance
Group A-2	
No.	**Test Item**
A-2-1	Low level contact resistance
A-2-2	Durability (preconditioning)
A-2-3	Thermal shock
A-2-4	Low level contact resistance
A-2-5	Cyclic temperature and humidity
A-2-6	Low level contact resistance
A-2-7	Re-seating
A-2-8	Low level contact resistance
Group A-3	
No.	**Test Item**
A-3-1	Low level contact resistance

A-3-2	Durability (preconditioning)
A-3-3	Temperature life (preconditioning)
A-3-4	Low level contact resistance
A-3-5	Vibration
A-3-6	Low level contact resistance
Group A-4	
No.	**Test Item**
A-4-1	Low level contact resistance
A-4-2	Durability (preconditioning)
A-4-3	Temperature life (preconditioning)
A-4-4	Low level contact resistance
A-4-5	Mixed flowing gas
A-4-6	Low level contact resistance
A-4-7	Thermal disturbance
A-4-8	Low level contact resistance
A-4-9	Re-seating
A-4-10	Low level contact resistance
Group A-7	
No.	**Test Item**
A-7-1	Dielectric withstanding voltage
A-7-2	Low level contact resistance
A-7-3	Durability (preconditioning)
A-7-4	Insertion force
A-7-5	Extraction force

A-7-6	Durability
A-7-7	Extraction force
A-7-8	Durability
A-7-9	Extraction force
A-7-10	Low level contact resistance
A-7-11	Dielectric withstanding voltage
A-7-12	Insulation Resistance
Group B-1	
No.	**Test Item**
B-1-4	4-Axis Continuity
Group B-5	
No.	**Test Item**
B-5-1	Critical Dimensions
Group B-6	
No.	**Test Item**
B-6-1	Contact Current Rating

7. Test Result Summary

Test Item	Clause	Result
Construction	3.2.1 (6)	Pass
Critical Dimensions	3.2.1 (8)	Pass
Low level contact resistance	3.7.8.1	Pass
Dielectric withstanding voltage	3.7.8.2	Pass
Insulation Resistance	3.7.8.3	Pass
Contact Current Rating	3.7.8.4	Pass
Insertion force	3.8.1.1	Pass
Extraction force	3.8.1.2	Pass
Durability	3.8.1.3	Pass
Reseating	3.8.1.3	Pass
4-Axis Continuity	3.8.1.6	Pass
Temperature life	3.8.2	Pass
Thermal shock	3.8.2	Pass
Cyclic temperature and humidity	3.8.2	Pass
Vibration	3.8.2	Pass
Mixed flowing gas	3.8.2	Pass
Thermal disturbance	3.8.2	Pass

8. Test Detail

8.1. Clause 3.2.1 (6) Construction

Construction				
Testing Period	**Measure environment**		**Test Engineer**	**Test Result**
2021/10/27	Temperature(℃)	22.3	Zhan Xingcheng	**Pass**
	Humidity (RH)	76.5 %		

EMC ground return path			
Description	Sample Coding		
	UT39aa	UT40aa	UT41aa
1.EMC spring	Y	Y	Y
2.EMC pad	Y	Y	Y
3.Solid bumps	N	N	N
4.Distance between the bumps	N/A	N/A	N/A
Result	Pass	Pass	Pass

Note:
Receptacle configurations with a conductive shell.
The requirements apply to the receptacle contact dimensions shown in ALTERNATE SECTION A-A Figure B-5.
Receptacle configuration with respect to mounting surface: Right angle

Number of pins: 24

A1	A2	A3	A4	A5	A6	A7	A8	A9	A10	A11	A12
√	√	√	√	√	√	√	√	√	√	√	√
B12	**B11**	**B10**	**B9**	**B8**	**B7**	**B6**	**B5**	**B4**	**B3**	**B2**	**B1**
√	√	√	√	√	√	√	√	√	√	√	√

EMC Springs/bumps/EMC Pad photograph

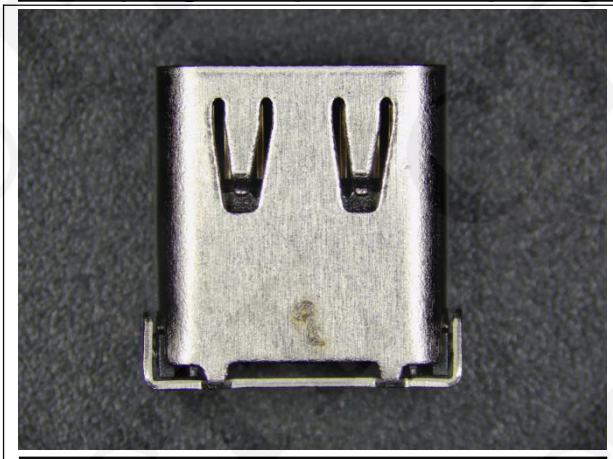	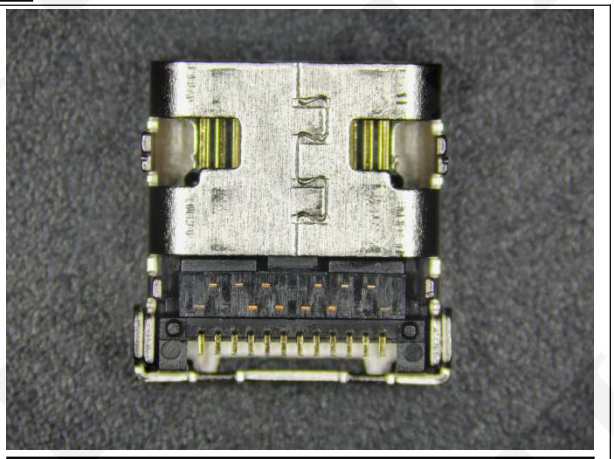
EMC spring	**NO Solid bumps**
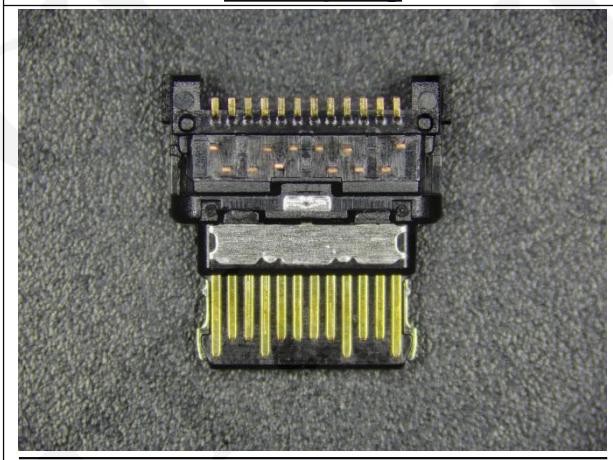	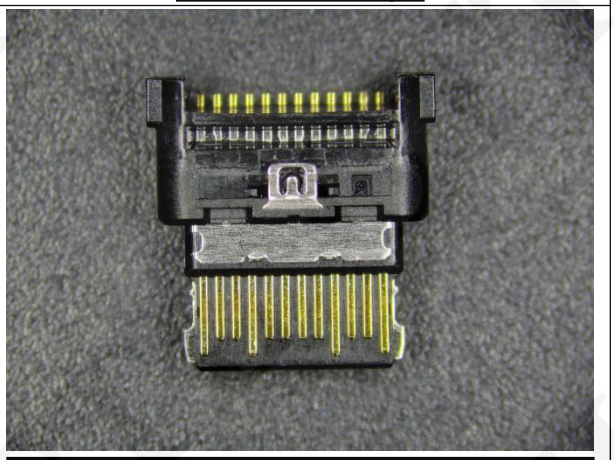
EMC pad (A Side)	**EMC pad (B Side)**

8.2. Clause 3.2.1 (8) Critical Dimensions

B-5-1 Critical Dimensions				
Testing Period	**Measure environment**		**Test Engineer**	**Test Result**
2021/10/27	Temperature(℃)	22.3	Zhan Xingcheng	**Pass**
	Humidity (RH)	76.5 %		

Test data: (Unit:mm)			
B-5-1 Critical Dimensions – Receptacle			
Description	Sample Coding		
	B5-1	B5-2	B5-3
1.Receptacle inside opening (8.32～8.40)	8.351	8.362	8.353
2.Receptacle insider opening position tolerance (0.04 with datum A/B/C)	0.017	0.009	0.011
3.Receptacle signal pin length （3.35～3.65）	3.495	3.494	3.486
4.Pin length delta (0.30～0.70)	0.493	0.453	0.482
5.Tongue width (6.635～6.735)	6.6881	6.6921	6.6821
6.Contact width (0.21～0.29)	0.233	0.236	0.235
7.Contact width position tolerance (0.08 with datum A/B/C)	0.017	0.017	0.019
8. Tongue thickness （0.65～0.75）	0.693	0.701	0.704
9.Receptacle inside thickness (2.52～2.60)	2.555	2.563	2.563
Decision result	Pass	Pass	Pass

8.3. Clause 3.7.8.1 Low level contact resistance

A-1-1 Low level contact resistance				
Testing Period	**Measure environment**		**Test Engineer**	**Test Result**
2022/01/05	Temperature(℃)	21.7	Zhan Xingcheng	**Pass**
	Humidity (RH)	61.7 %		
Test condition	Mated；Maximum open circuit voltage 20 mV；Test current 100 mA.			
Criteria	≤40 mΩ（Initial）			

A-1-1 Low Level Contact Resistance (mΩ)

测试结果(mΩ)												
样品编号	A1	A2	A3	A4	A5	A6	A7	A8	A9	A10	A11	A12
A1-1	22.8	23.8	24.6	24.3	23.2	22.6	24.1	25.6	23.5	23.9	22.5	21.1
A1-2	20.9	23.6	24.0	24.3	22.3	24.1	25.8	24.7	24.1	24.7	24.0	22.4
A1-3	21.9	23.8	24.8	24.4	22.9	25.3	24.2	23.5	22.4	23.9	24.1	24.5
A1-4	21.3	23.6	23.6	24.0	23.8	24.6	24.3	24.9	25.1	24.7	24.9	23.2
A1-5	23.5	23.9	24.0	23.5	22.7	24.0	23.0	25.0	23.8	23.4	23.3	22.2
样品编号	B1	B2	B3	B4	B5	B6	B7	B8	B9	B10	B11	B12
A1-1	20.6	22.6	23.5	21.8	24.5	24.4	23.8	23.4	23.0	23.3	21.6	23.6
A1-2	21.4	23.7	23.4	21.3	24.1	25.5	23.9	24.0	22.6	24.0	22.0	21.3
A1-3	22.6	24.3	22.5	22.7	24.6	24.7	23.5	24.1	22.5	23.4	21.5	21.9
A1-4	21.5	22.4	23.6	27.8	24.9	25.6	23.7	24.1	23.1	25.0	24.1	22.3
A1-5	20.1	21.8	22.4	21.0	22.9	23.7	23.5	23.0	22.1	22.8	20.7	20.5

A-1-4 Low level contact resistance				
Testing Period	**Measure environment**		**Test Engineer**	**Test Result**
2020/01/12	Temperature(℃)	20.9	Zhan Xingcheng	**Pass**
	Humidity (RH)	54.4 %		
Test condition	Mated；Maximum open circuit voltage 20 mV；Test current 100 mA.			
Criteria	≤50 mΩ			

A-1-4 Low Level Contact Resistance (mΩ)

测试结果(mΩ)												
样品编号	A1	A2	A3	A4	A5	A6	A7	A8	A9	A10	A11	A12
A1-1	20.8	23.4	24.7	25.4	23.5	25.8	26.2	25.4	24.6	24.7	23.8	26.2
A1-2	20.9	23.7	24.6	24.7	23.5	24.9	26.1	26.7	23.4	24.2	22.6	20.9
A1-3	21.9	25.1	24.7	26.6	22.9	26.6	24.4	26.2	25.1	25.4	23.7	22.2
A1-4	21.5	24.1	24.7	25.7	27.7	26.2	25.0	26.2	23.5	24.0	22.6	21.5
A1-5	22.2	24.4	24.7	23.2	23.2	24.3	23.6	24.7	23.7	23.6	23.2	22.6
样品编号	B1	B2	B3	B4	B5	B6	B7	B8	B9	B10	B11	B12
A1-1	25.6	25.5	26.4	23.8	25.8	26.6	25.5	25.8	25.1	25.2	22.5	22.1
A1-2	24.1	23.5	24.8	22.8	24.6	25.5	25.6	24.7	23.8	23.2	21.9	22.1
A1-3	21.1	22.4	23.9	24.5	25.6	26.7	25.1	25.1	26.5	25.1	22.8	21.7
A1-4	21.1	23.8	25.4	21.9	24.1	27.2	25.7	23.2	25.1	23.2	20.9	21.8
A1-5	24.5	22.4	23.1	21.5	25.5	25.3	29.6	23.6	23.2	26.6	22.8	21.9

A-1-6 Low level contact resistance				
Testing Period	**Measure environment**		**Test Engineer**	**Test Result**
2022/01/12	Temperature(℃)	20.5	Zhan Xingcheng	**Pass**
	Humidity (RH)	55.8 %		
Test condition	Mated；Maximum open circuit voltage 20 mV；Test current 100 mA.			
Criteria	≤50 mΩ			

A-1-6 Low Level Contact Resistance (mΩ)

测试结果(mΩ)												
样品编号	A1	A2	A3	A4	A5	A6	A7	A8	A9	A10	A11	A12
A1-1	21.7	25.6	24.1	24.7	22.9	23.6	24.7	25.6	23.9	24.1	22.6	20.9
A1-2	22.1	23.3	24.2	23.8	22.6	24.4	24.1	24.7	24.6	24.5	24.1	24.3
A1-3	22.1	24.2	25.8	26.2	22.5	29.2	25.5	24.8	25.6	24.2	24.1	22.1
A1-4	21.5	24.6	23.7	24.2	22.2	23.6	23.8	25.3	23.7	24.1	23.5	22.1
A1-5	22.7	24.5	25.1	25.3	24.2	22.9	25.3	25.1	24.8	24.7	24.8	22.1
样品编号	B1	B2	B3	B4	B5	B6	B7	B8	B9	B10	B11	B12
A1-1	20.2	22.4	23.4	22.5	26.4	26.6	26.1	24.9	24.8	25.7	27.9	22.2
A1-2	21.7	24.4	24.2	22.1	26.2	25.5	25.7	26.5	24.6	26.1	22.5	22.1
A1-3	21.6	22.7	23.4	26.1	30.4	27.8	26.3	28.8	26.5	25.4	22.1	22.5
A1-4	20.2	23.4	23.9	21.7	24.1	27.7	24.5	24.4	23.7	24.1	21.5	22.1
A1-5	23.2	24.2	23.1	21.9	24.4	24.5	26.4	23.1	23.9	24.6	21.9	22.4

A-2-1 Low level contact resistance				
Testing Period	**Measure environment**		**Test Engineer**	**Test Result**
2022/01/05	Temperature(℃)	21.5	Zhan Xingcheng	**Pass**
	Humidity (RH)	72.4 %		
Test condition	Mated；Maximum open circuit voltage 20 mV；Test current 100 mA.			
Criteria	≤40 mΩ（Initial）			

A-2-1 Low Level Contact Resistance (mΩ)

测试结果(mΩ)												
样品编号	A1	A2	A3	A4	A5	A6	A7	A8	A9	A10	A11	A12
A2-1	21.1	23.6	23.5	24.1	22.7	23.6	23.2	25.2	23.8	23.5	22.4	21.2
A2-2	20.7	23.1	23.7	23.1	22.4	22.8	23.3	24.0	22.8	23.1	22.8	20.8
A2-3	21.6	24.1	25.5	23.4	22.5	24.0	24.1	25.0	23.6	23.3	23.0	21.9
A2-4	21.7	23.2	23.8	25.2	23.5	23.8	23.9	25.5	23.7	23.6	23.4	22.5
A2-5	21.6	23.7	24.3	24.3	23.3	27.3	23.8	25.5	24.4	24.2	24.0	21.1
样品编号	B1	B2	B3	B4	B5	B6	B7	B8	B9	B10	B11	B12
A2-1	20.5	21.4	22.9	20.3	23.2	24.5	23.6	21.2	21.0	24.5	20.2	20.7
A2-2	20.4	21.3	22.5	20.4	23.8	24.0	23.5	21.8	21.8	22.9	20.6	21.0
A2-3	20.4	22.4	22.3	22.1	24.0	24.9	23.2	25.0	23.5	24.2	22.0	21.5
A2-4	20.8	21.8	23.1	20.5	24.8	25.3	24.8	22.8	22.7	22.6	21.1	20.3
A2-5	20.1	21.3	22.5	20.6	23.0	23.6	23.0	21.6	21.9	22.4	19.9	20.3

A-2-4 Low level contact resistance				
Testing Period	**Measure environment**		**Test Engineer**	**Test Result**
2022/01/06	Temperature(℃)	21.6	Zhan Xingcheng	**Pass**
	Humidity (RH)	70.8 %		
Test condition	Mated；Maximum open circuit voltage 20 mV；Test current 100 mA.			
Criteria	≤50 mΩ			

A-2-4 Low Level Contact Resistance (mΩ)

测试结果(mΩ)												
样品编号	A1	A2	A3	A4	A5	A6	A7	A8	A9	A10	A11	A12
A2-1	22.8	27.2	26.3	27.1	23.5	26.8	27.2	25.5	24.5	24.2	24.1	21.7
A2-2	20.7	23.3	23.4	24.0	23.3	26.4	27.0	28.9	23.5	23.8	22.5	21.2
A2-3	21.8	24.7	30.5	24.0	25.7	25.9	26.3	24.8	23.3	24.4	23.9	20.1
A2-4	22.4	24.1	24.3	24.8	26.2	24.6	29.7	25.7	25.7	25.5	24.6	23.5
A2-5	23.2	23.5	24.1	24.1	24.2	27.0	28.6	27.0	25.7	24.2	23.2	21.8
样品编号	B1	B2	B3	B4	B5	B6	B7	B8	B9	B10	B11	B12
A2-1	22.1	22.2	24.5	24.7	24.4	24.3	25.4	23.7	21.9	22.1	22.2	23.8
A2-2	21.4	22.5	22.9	21.3	24.7	25.1	25.9	23.4	23.3	24.6	21.2	21.8
A2-3	20.1	23.1	23.9	24.2	25.4	27.3	26.5	23.5	24.1	24.7	23.8	22.8
A2-4	21.7	22.3	23.7	23.3	21.5	26.7	25.3	23.4	22.8	22.4	21.4	22.0
A2-5	21.8	21.4	22.5	22.0	23.8	23.9	23.5	22.3	25.4	27.9	22.6	23.2

A-2-6 Low level contact resistance				
Testing Period	**Measure environment**		**Test Engineer**	**Test Result**
2022/01/17	Temperature(℃)	21.6	Zhan Xingcheng	**Pass**
	Humidity (RH)	71.0 %		
Test condition	Mated；Maximum open circuit voltage 20 mV；Test current 100 mA.			
Criteria	≤50 mΩ			

A-2-6 Low Level Contact Resistance (mΩ)

测试结果(mΩ)												
样品编号	A1	A2	A3	A4	A5	A6	A7	A8	A9	A10	A11	A12
A2-1	28.2	37.5	32.5	29.2	30.1	28.1	27.3	26.8	25.8	25.0	24.9	23.2
A2-2	20.4	23.1	23.1	23.1	23.6	24.6	29.0	24.6	23.5	23.9	22.9	21.4
A2-3	22.8	26.4	27.1	27.1	30.9	29.7	27.9	25.7	25.1	26.8	24.1	21.8
A2-4	21.9	24.1	24.0	25.7	25.1	25.0	26.1	27.3	24.6	24.3	23.5	22.3
A2-5	20.2	23.5	24.2	24.0	24.6	26.8	26.5	25.0	24.5	23.5	23.4	21.6
样品编号	B1	B2	B3	B4	B5	B6	B7	B8	B9	B10	B11	B12
A2-1	20.4	21.8	23.9	22.9	26.5	25.8	23.6	23.7	26.9	25.3	22.3	21.9
A2-2	21.4	21.6	22.6	21.1	23.9	24.7	24.0	22.3	22.2	23.4	20.5	20.5
A2-3	19.8	21.9	23.5	23.1	24.6	25.5	24.4	24.0	24.8	26.2	25.5	22.1
A2-4	20.8	22.2	23.2	21.4	24.7	25.9	24.9	23.3	22.5	22.6	21.8	21.6
A2-5	21.6	21.9	23.1	22.3	23.6	24.4	25.8	25.1	22.3	24.2	24.5	20.5

A-2-8 Low level contact resistance				
Testing Period	**Measure environment**		**Test Engineer**	**Test Result**
2022/01/17	Temperature(℃)	21.7	Zhan Xingcheng	**Pass**
	Humidity (RH)	70.5 %		
Test condition	Mated；Maximum open circuit voltage 20 mV；Test current 100 mA.			
Criteria	≤50 mΩ			

A-2-8 Low Level Contact Resistance (mΩ)

样品编号	A1	A2	A3	A4	A5	A6	A7	A8	A9	A10	A11	A12
A2-1	28.5	36.2	30.7	29.3	29.2	26.4	26.7	26.5	24.9	24.5	25.4	22.9
A2-2	20.3	24.2	23.5	23.4	23.1	24.7	28.5	23.9	24.1	24.3	23.1	20.7
A2-3	21.5	25.6	27.2	27.3	30.0	28.8	27.7	26.3	26.1	26.7	24.2	21.7
A2-4	21.1	24.2	24.1	24.7	25.2	24.7	25.1	27.1	25.0	24.3	23.3	22.5
A2-5	20.3	23.3	24.2	24.0	23.9	24.4	26.0	22.5	26.1	24.0	22.7	21.7
样品编号	B1	B2	B3	B4	B5	B6	B7	B8	B9	B10	B11	B12
A2-1	21.2	22.2	24.5	22.5	25.3	25.9	24.1	22.1	23.1	24.0	22.2	21.5
A2-2	20.9	21.8	23.0	23.1	23.5	24.1	25.2	23.3	23.2	22.1	20.7	20.5
A2-3	20.7	20.7	23.5	23.5	24.1	25.0	26.0	23.9	24.7	25.1	24.7	22.3
A2-4	20.1	21.7	23.3	22.6	24.5	24.4	25.1	24.5	23.0	22.4	21.8	20.9
A2-5	21.7	22.0	23.3	22.7	24.1	25.3	24.3	25.1	22.7	21.3	24.5	20.7

A-3-1 Low level contact resistance				
Testing Period	**Measure environment**		**Test Engineer**	**Test Result**
2021/12/31	Temperature(℃)	20.1	Ge Xinglin	**Pass**
	Humidity (RH)	60.9 %		
Test condition	Mated；Maximum open circuit voltage 20 mV；Test current 100 mA.			
Criteria	≤40 mΩ（Initial）			

A-3-1 Low Level Contact Resistance (mΩ)

样品编号	A1	A2	A3	A4	A5	A6	A7	A8	A9	A10	A11	A12
A3-1	21.8	24.7	24.1	24.4	23.5	25.2	23.9	26.1	23.1	23.3	22.4	20.9
A3-2	20.1	24.3	24.7	23.2	21.9	23.7	23.3	24.1	23.4	23.7	22.7	22.2
A3-3	21.8	23.6	24.4	23.2	23.6	25.6	24.2	25.7	23.1	23.8	24.1	22.1
A3-4	21.7	24.5	25.0	23.4	22.6	23.5	24.2	24.5	23.9	23.4	24.2	22.5
A3-5	20.1	23.3	23.2	23.6	22.8	23.5	24.1	24.7	26.1	23.8	24.1	21.1
样品编号	B1	B2	B3	B4	B5	B6	B7	B8	B9	B10	B11	B12
A3-1	22.1	21.9	23.9	20.5	24.1	24.1	23.1	21.7	22.6	22.2	20.6	23.4
A3-2	20.5	22.2	23.1	20.4	25.7	21.4	25.9	23.2	22.2	23.0	20.1	20.5
A3-3	19.5	20.9	21.7	20.3	22.3	23.9	22.5	22.6	21.9	22.6	20.1	20.6
A3-4	21.2	21.7	22.6	21.1	22.6	23.1	22.8	22.6	22.7	23.1	20.3	20.7
A3-5	20.4	22.8	23.9	20.8	25.5	25.4	24.1	24.6	23.9	24.1	21.3	22.7

A-3-4 Low level contact resistance				
Testing Period	**Measure environment**		**Test Engineer**	**Test Result**
2022/01/07	Temperature(℃)	21.5	Ge Xinglin	**Pass**
	Humidity (RH)	67.1 %		
Test condition	Mated；Maximum open circuit voltage 20 mV；Test current 100 mA.			
Criteria	≤50 mΩ			

A-3-4 Low Level Contact Resistance (mΩ)

样品编号	A1	A2	A3	A4	A5	A6	A7	A8	A9	A10	A11	A12
A3-1	25.5	25.3	25.5	24.0	27.0	25.4	25.5	25.1	24.6	26.6	24.5	23.2
A3-2	21.6	24.4	25.1	23.4	24.7	28.3	25.1	24.9	26.0	25.2	24.1	22.5
A3-3	27.1	24.1	24.4	23.9	24.8	26.7	27.0	26.6	24.2	24.3	24.0	21.8
A3-4	21.5	24.1	25.1	25.1	25.3	25.1	26.5	25.7	23.9	24.2	23.4	22.4
A3-5	21.6	24.0	25.4	24.3	28.1	26.8	26.2	26.2	24.8	25.5	25.4	23.7
样品编号	B1	B2	B3	B4	B5	B6	B7	B8	B9	B10	B11	B12
A3-1	23.1	23.8	23.7	23.2	25.5	25.9	24.5	24.7	24.8	24.1	21.5	21.0
A3-2	21.6	22.3	22.6	28.8	25.8	25.9	25.5	27.4	28.0	25.3	21.3	23.2
A3-3	21.8	21.2	22.4	25.3	24.2	24.8	26.4	25.5	26.1	27.5	25.2	22.9
A3-4	21.3	22.2	22.3	21.1	23.6	24.4	25.0	24.7	25.0	26.6	24.7	22.7
A3-5	20.6	22.7	22.8	21.8	24.5	25.7	27.1	25.1	27.1	25.1	24.7	23.1

A-3-6 Low level contact resistance				
Testing Period	**Measure environment**		**Test Engineer**	**Test Result**
2022/01/11	Temperature(℃)	21.0	Ge Xinglin	**Pass**
	Humidity (RH)	52.7 %		
Test condition	Mated；Maximum open circuit voltage 20 mV；Test current 100 mA.			
Criteria	≤50 mΩ			

A-3-6 Low Level Contact Resistance (mΩ)

样品编号	A1	A2	A3	A4	A5	A6	A7	A8	A9	A10	A11	A12
A3-1	27.4	29.6	28.2	25.8	27.6	29.4	34.3	35.1	26.6	28.6	23.2	28.1
A3-2	22.3	24.6	27.6	24.1	26.8	25.1	24.9	25.9	25.6	25.2	23.9	23.3
A3-3	24.1	25.8	26.8	24.6	26.7	30.6	35.8	29.5	25.6	28.1	25.3	23.1
A3-4	31.4	25.9	40.5	39.8	27.5	32.1	31.6	29.4	27.5	27.6	25.7	29.0
A3-5	25.1	26.3	24.7	30.8	26.2	27.3	25.6	29.2	28.4	25.4	26.6	24.8
样品编号	B1	B2	B3	B4	B5	B6	B7	B8	B9	B10	B11	B12
A3-1	21.9	22.9	24.6	22.2	23.2	30.4	28.4	28.3	29.9	25.1	23.2	27.1
A3-2	20.2	23.2	25.2	32.7	27.1	30.6	27.9	29.6	28.7	26.7	35.6	28.7
A3-3	23.2	22.3	23.6	24.3	23.1	25.6	23.6	47.2	27.4	25.7	21.5	22.1
A3-4	24.3	22.7	23.2	22.5	29.4	31.9	29.5	25.2	24.9	25.1	23.5	21.7
A3-5	24.7	25.8	29.6	26.9	27.4	25.8	26.6	27.9	28.6	29.3	26.6	27.7

A-4-1 Low level contact resistance				
Testing Period	**Measure environment**		**Test Engineer**	**Test Result**
2021/12/31	Temperature(℃)	20.1	Zhan Xingcheng	**Pass**
	Humidity (RH)	60.9 %		
Test condition	Mated；Maximum open circuit voltage 20 mV；Test current 100 mA.			
Criteria	≤40 mΩ（Initial）			

A-4-1 Low Level Contact Resistance (mΩ)

样品编号	A1	A2	A3	A4	A5	A6	A7	A8	A9	A10	A11	A12
A4-1	21.4	22.1	24.3	23.2	22.5	24.1	21.1	20.1	20.1	23.1	22.1	22.3
A4-2	21.6	23.9	22.8	24.1	22.1	23.6	22.7	23.1	24.3	22.8	22.9	21.1
A4-3	20.7	22.9	23.5	23.5	22.3	23.1	23.1	24.9	23.1	23.4	22.9	21.6
A4-4	22.9	24.1	24.5	24.0	23.5	24.1	24.1	24.4	24.0	24.1	23.1	21.7
A4-5	22.1	24.1	23.1	23.1	23.1	24.3	23.8	23.4	23.2	23.3	22.5	21.2
A4-6	20.5	22.4	23.4	22.5	21.6	23.6	23.5	23.9	23.1	22.8	22.6	21.3
A4-7	20.7	24.5	23.8	22.3	24.2	23.6	23.9	23.1	24.9	23.6	21.3	21.1
A4-8	22.6	24.6	24.6	23.9	23.4	24.3	24.6	24.7	24.1	24.1	23.1	21.9
A4-9	21.1	23.1	24.1	23.5	21.8	23.7	23.5	23.9	23.2	23.1	23.1	21.4
A4-10	21.8	23.2	24.0	23.8	23.8	26.1	23.1	24.8	24.1	23.5	23.1	21.6
样品编号	B1	B2	B3	B4	B5	B6	B7	B8	B9	B10	B11	B12
A4-1	19.9	22.7	22.5	20.1	22.7	23.4	23.1	21.0	22.7	22.3	20.5	20.3
A4-2	19.5	21.5	22.1	20.6	23.1	23.7	24.2	22.7	22.1	22.7	20.8	21.3
A4-3	19.6	21.6	21.9	20.1	22.2	23.5	22.7	22.5	21.7	24.1	20.2	20.1
A4-4	19.9	21.3	22.9	19.8	22.5	23.5	22.6	21.5	26.1	22.3	21.3	20.3
A4-5	20.1	21.9	22.7	21.2	23.1	24.3	23.1	21.5	20.9	23.5	20.9	22.7
A4-6	19.3	21.1	22.8	20.5	22.9	23.4	22.1	22.1	20.7	21.9	19.9	19.4
A4-7	19.2	21.1	21.7	21.6	24.2	24.3	22.6	23.1	22.5	22.1	20.1	20.6
A4-8	20.5	21.3	22.4	21.3	23.4	24.1	24.9	22.5	23.1	23.9	21.4	21.1
A4-9	19.1	21.1	23.3	20.3	22.1	23.9	23.1	21.5	21.8	22.9	20.7	20.3
A4-10	20.5	21.5	22.9	20.4	23.1	23.5	23.6	21.8	23.4	23.7	20.0	20.1

A-4-4 Low level contact resistance				
Testing Period	**Measure environment**		**Test Engineer**	**Test Result**
2022/01/07	Temperature(℃)	21.4	Zhan Xingcheng	**Pass**
	Humidity (RH)	69.3 %		
Test condition	Mated；Maximum open circuit voltage 20 mV；Test current 100 mA.			
Criteria	≤50 mΩ			

A-4-4 Low Level Contact Resistance (mΩ)

样品编号	A1	A2	A3	A4	A5	A6	A7	A8	A9	A10	A11	A12
A4-1	26.2	24.1	25.7	24.5	37.6	28.4	32.3	24.5	27.1	23.1	24.5	25.2
A4-2	24.3	24.3	24.7	21.5	32.4	30.4	31.2	25.1	25.6	29.7	24.3	26.3
A4-3	21.5	27.7	24.9	24.7	33.9	31.5	30.9	24.6	26.7	26.5	22.6	27.8
A4-4	22.6	24.8	24.0	24.8	30.1	36.7	21.9	25.3	21.4	27.4	24.7	28.1
A4-5	23.4	27.8	25.0	27.0	31.5	31.2	29.8	21.7	27.8	30.3	27.8	29.1
A4-6	24.5	29.0	26.6	28.9	33.0	29.9	27.1	22.4	24.3	31.2	27.0	24.3
A4-7	21.2	27.7	26.5	29.9	32.6	29.8	30.1	25.6	24.0	24.0	26.5	23.5
A4-8	27.7	27.4	25.9	29.0	33.0	30.0	29.7	27.8	24.7	27.7	27.8	24.1
A4-9	26.4	24.5	24.1	30.1	34.1	27.8	27.8	21.4	27.0	26.6	21.5	24.2
A4-10	25.6	26.9	23.9	24.4	37.4	24.5	29.9	29.0	29.8	25.7	24.6	27.0
样品编号	B1	B2	B3	B4	B5	B6	B7	B8	B9	B10	B11	B12
A4-1	25.2	27.1	27.7	23.3	38.8	29.4	31.2	27.7	25.1	26.6	26.3	22.5
A4-2	24.2	25.1	24.8	23.5	37.4	31.4	30.9	24.5	24.1	25.3	28.1	23.4
A4-3	23.6	24.7	24.9	24.1	30.5	32.5	32.7	21.9	24.9	21.7	21.5	27.1
A4-4	27.5	24.0	26.6	27.8	35.6	39.4	27.8	29.2	27.8	22.4	24.8	26.5
A4-5	24.3	30.4	25.7	24.7	36.7	29.0	27.8	23.4	23.3	29.9	24.9	25.4
A4-6	23.1	24.5	24.9	29.0	33.1	27.8	24.5	25.4	25.2	30.0	25.0	24.3
A4-7	24.0	30.1	21.7	29.1	32.4	32.4	26.8	24.7	22.5	27.9	29.1	24.7
A4-8	22.5	31.2	29.8	28.1	37.8	31.5	27.5	24.9	24.8	29.0	33.1	21.7
A4-9	24.8	29.6	30.0	24.6	39.0	36.0	26.9	26.3	30.1	25.0	32.7	27.9
A4-10	30.1	26.7	24.5	24.9	39.4	34.5	31.9	27.8	31.4	24.7	31.5	24.5

A-4-6 Low level contact resistance				
Testing Period	**Measure environment**		**Test Engineer**	**Test Result**
2022/01/14	Temperature(℃)	20.7	Zhan Xingcheng	**Pass**
	Humidity (RH)	58.3 %		
Test condition	Mated；Maximum open circuit voltage 20 mV；Test current 100 mA.			
Criteria	≤50 mΩ			

A-4-6 Low Level Contact Resistance (mΩ)

样品编号	A1	A2	A3	A4	A5	A6	A7	A8	A9	A10	A11	A12
A4-1	22.7	24.3	25.1	29.1	27.1	29.2	21.2	26.8	24.5	24.7	27.5	25.7
A4-2	23.5	25.6	25.1	24.7	24.1	23.6	24.1	25.1	23.3	24.1	23.2	21.5
A4-3	21.6	24.9	23.3	24.5	23.9	26.4	24.4	26.5	24.9	26.2	23.7	22.6
A4-4	22.9	24.3	29.4	26.1	25.1	25.9	26.6	26.9	24.3	24.6	24.6	21.9
A4-5	21.6	25.5	24.4	25.2	26.4	25.5	27.9	26.5	25.8	23.3	21.3	22.6
A4-6	23.2	25.6	25.5	24.2	26.6	26.9	22.7	26.3	24.6	24.5	22.9	22.1
A4-7	21.2	23.6	24.7	25.7	24.6	30.5	25.7	26.5	26.5	25.5	25.2	21.4
A4-8	22.5	24.7	24.6	26.1	24.7	27.7	31.2	26.5	25.3	29.1	25.5	23.2
A4-9	24.3	26.3	24.8	28.1	25.1	26.1	34.2	27.9	26.1	33.1	24.3	24.3
A4-10	25.1	23.1	24.1	25.5	24.6	27.7	28.6	27.4	25.3	26.4	28.7	25.3
样品编号	B1	B2	B3	B4	B5	B6	B7	B8	B9	B10	B11	B12
A4-1	20.5	22.5	24.1	22.4	24.7	27.1	25.8	22.5	23.6	22.3	21.5	21.3
A4-2	20.8	23.4	24.5	24.1	27.1	26.2	25.7	25.1	24.7	25.9	21.5	22.1
A4-3	20.3	22.4	22.5	22.1	24.7	25.2	29.1	23.7	23.9	24.1	21.3	21.3
A4-4	21.9	22.3	26.2	23.1	25.4	25.6	27.5	23.5	23.8	23.7	21.3	21.8
A4-5	22.4	26.6	25.7	24.5	25.3	25.6	25.5	24.0	24.4	23.5	21.2	20.8
A4-6	22.1	23.9	23.6	27.6	26.3	25.3	26.2	29.2	23.2	22.9	21.8	21.1
A4-7	19.3	23.1	24.6	32.1	27.4	25.8	25.9	25.7	33.2	31.4	21.7	21.3
A4-8	27.1	25.1	23.9	29.4	28.2	34.4	29.2	24.5	31.6	29.2	24.4	22.7
A4-9	21.1	22.4	24.6	23.3	24.5	26.6	27.2	26.8	24.5	26.2	27.4	25.2
A4-10	22.6	23.7	24.5	26.2	24.7	28.6	25.8	26.2	27.6	28.8	27.2	21.3

A-4-8 Low level contact resistance				
Testing Period	**Measure environment**		**Test Engineer**	**Test Result**
2022/01/18	Temperature(℃)	21.3	Zhan Xingcheng	**Pass**
	Humidity (RH)	64.1 %		
Test condition	Mated；Maximum open circuit voltage 20 mV；Test current 100 mA.			
Criteria	≤50 mΩ			

A-4-8 Low Level Contact Resistance (mΩ)

样品编号	A1	A2	A3	A4	A5	A6	A7	A8	A9	A10	A11	A12
A4-1	23.1	24.1	25.1	24.1	27.0	25.8	24.5	24.8	24.2	23.6	23.4	21.1
A4-2	22.3	24.5	23.1	24.1	23.1	23.3	23.2	25.3	23.8	23.4	24.1	22.0
A4-3	21.9	24.7	24.9	24.4	23.7	24.8	27.1	26.2	24.2	25.1	23.7	23.2
A4-4	22.4	24.4	26.2	25.0	29.0	36.1	31.1	27.1	25.6	25.4	24.1	21.6
A4-5	20.8	24.5	24.9	24.8	25.5	25.7	24.5	26.0	25.2	25.2	23.3	21.8
A4-6	21.9	24.1	24.7	24.4	24.5	25.8	26.1	26.6	24.4	23.6	23.5	22.2
A4-7	26.3	27.4	26.1	24.8	27.8	37.2	26.6	29.1	28.1	25.0	24.8	22.5
A4-8	31.4	29.1	26.1	27.4	27.5	34.7	27.5	26.9	30.9	27.1	25.4	22.7
A4-9	24.0	22.7	28.1	31.4	26.1	30.3	35.8	27.7	25.4	27.9	24.0	22.9
A4-10	34.7	25.3	24.9	25.2	24.3	24.7	32.9	29.0	27.9	25.1	23.7	22.0
样品编号	B1	B2	B3	B4	B5	B6	B7	B8	B9	B10	B11	B12
A4-1	22.7	24.3	28.4	22.4	30.1	32.4	25.8	26.7	21.7	29.0	23.5	25.0
A4-2	20.7	22.6	23.7	21.8	27.8	25.5	27.2	25.9	24.1	24.6	21.8	21.7
A4-3	31.9	22.1	22.6	21.5	23.6	24.5	23.5	23.2	22.1	23.1	20.9	20.9
A4-4	23.2	21.8	23.6	21.3	25.1	24.6	24.7	23.1	23.2	23.9	21.3	21.2
A4-5	21.8	22.3	24.9	22.5	28.2	25.7	25.1	22.1	24.1	23.7	21.9	24.4
A4-6	20.6	23.1	23.9	22.9	23.9	26.2	23.3	24.8	23.5	22.9	20.9	20.7
A4-7	21.7	22.5	26.2	24.2	26.9	24.7	41.2	42.2	24.6	25.4	24.5	25.1
A4-8	22.1	24.1	24.4	22.6	25.1	24.1	24.7	24.5	26.1	23.4	21.7	21.7
A4-9	22.1	22.8	24.3	20.6	25.1	26.8	28.6	27.2	26.5	25.2	22.5	22.0
A4-10	21.2	22.2	23.7	20.5	24.1	25.0	27.7	29.1	24.9	23.4	21.1	29.7

A-4-10 Low level contact resistance				
Testing Period	**Measure environment**		**Test Engineer**	**Test Result**
2022/01/18	Temperature(℃)	21.3	Zhan Xingcheng	**Pass**
	Humidity (RH)	64.1 %		
Test condition	Mated；Maximum open circuit voltage 20 mV；Test current 100 mA.			
Criteria	≤50 mΩ			

A-4-10 Low Level Contact Resistance (mΩ)

样品编号	A1	A2	A3	A4	A5	A6	A7	A8	A9	A10	A11	A12
A4-1	21.5	24.2	24.3	23.2	23.3	24.9	24.4	24.5	23.7	22.5	23.7	21.5
A4-2	22.2	24.4	23.6	24.0	22.7	22.9	24.7	23.0	23.3	23.9	23.1	21.7
A4-3	21.0	24.6	24.9	24.2	23.0	22.8	24.3	23.6	25.5	24.0	24.8	23.6
A4-4	22.5	24.5	25.5	24.7	26.6	22.1	22.8	25.1	24.1	23.6	23.1	21.4
A4-5	22.1	24.2	24.1	24.3	25.4	25.7	24.7	25.8	25.4	24.9	23.2	22.2
A4-6	22.8	23.5	24.1	23.4	22.5	23.1	23.4	24.1	23.4	22.9	22.8	21.5
A4-7	21.1	25.3	24.1	23.2	23.3	26.1	24.4	26.6	26.4	24.9	23.8	21.4
A4-8	22.1	25.3	25.3	24.5	24.1	24.2	24.8	25.3	24.2	24.6	24.2	21.7
A4-9	23.1	26.9	25.3	28.5	23.9	24.5	27.1	26.1	24.8	24.3	24.0	22.1
A4-10	29.1	26.1	27.4	25.8	32.1	25.1	28.5	30.1	25.3	24.5	25.1	21.1
样品编号	B1	B2	B3	B4	B5	B6	B7	B8	B9	B10	B11	B12
A4-1	24.2	23.8	23.7	20.7	25.3	26.3	28.1	22.8	23.5	24.1	21.8	22.1
A4-2	20.1	22.3	23.8	23.9	22.3	27.8	26.8	25.1	25.1	25.2	21.9	22.8
A4-3	20.0	22.4	24.2	20.5	23.7	23.8	23.1	24.4	22.9	23.4	21.7	21.6
A4-4	21.2	22.1	23.8	21.1	24.8	25.7	25.6	22.7	23.9	21.4	21.3	22.1
A4-5	21.1	23.1	24.2	21.9	25.0	26.1	24.4	23.7	23.4	24.5	21.1	21.7
A4-6	20.3	22.3	26.0	26.2	27.4	26.4	26.1	24.5	22.4	25.4	21.8	21.8
A4-7	21.1	22.4	22.9	23.4	26.1	24.1	25.1	31.5	25.8	24.4	20.6	20.6
A4-8	21.6	26.5	27.1	26.8	42.8	30.7	25.7	28.4	28.3	25.6	22.2	23.1
A4-9	20.6	25.9	29.1	22.6	25.1	25.7	24.2	23.9	24.6	23.8	22.9	24.9
A4-10	21.7	23.9	27.1	23.6	29.6	25.8	25.9	25.7	24.9	23.1	20.8	21.0

A-7-2 Low level contact resistance				
Testing Period	**Measure environment**		**Test Engineer**	**Test Result**
2022/01/07	Temperature(℃)	24.6	Ge Xinglin	**Pass**
	Humidity (RH)	68.0 %		
Test condition	Mated；Maximum open circuit voltage 20 mV；Test current 100 mA.			
Criteria	≤40 mΩ（Initial）			

Test data:

A-7-2 Low Level Contact Resistance (mΩ)

样品编号	A1	A2	A3	A4	A5	A6	A7	A8	A9	A10	A11	A12
A7-1	21.6	24.0	24.8	23.6	23.5	24.7	25.5	26.0	23.9	25.3	23.1	21.6
A7-2	21.8	24.6	24.6	24.2	23.8	24.6	24.6	25.7	24.0	24.7	23.8	22.3
A7-3	21.9	23.2	24.1	23.3	24.3	25.5	24.4	24.7	23.4	23.1	23.1	21.6
A7-4	22.8	24.5	25.8	24.8	23.6	24.9	24.5	25.8	24.5	23.9	23.9	22.4
A7-5	23.2	24.7	25.1	24.2	22.9	25.0	24.8	24.8	24.2	24.4	24.2	22.2
样品编号	B1	B2	B3	B4	B5	B6	B7	B8	B9	B10	B11	B12
A7-1	21.0	22.3	22.7	21.3	25.2	24.0	23.2	22.8	22.6	23.5	21.0	21.3
A7-2	20.5	22.0	23.1	20.6	23.2	25.8	24.6	22.1	22.6	22.8	21.2	21.2
A7-3	21.1	21.5	22.8	20.3	23.7	24.2	23.8	23.1	23.3	25.1	22.5	21.8
A7-4	20.8	22.2	22.7	20.9	23.8	25.3	24.5	24.2	24.0	23.3	22.5	21.9
A7-5	20.1	22.7	22.7	20.9	23.3	24.4	23.1	23.5	22.8	23.1	21.6	21.2

A-7-10 Low level contact resistance				
Testing Period	**Measure environment**		**Test Engineer**	**Test Result**
2022/01/12	Temperature(℃)	20.6	Ge Xinglin	**Pass**
	Humidity (RH)	53.8 %		
Test condition	Mated；Maximum open circuit voltage 20 mV；Test current 100 mA.			
Criteria	≤50 mΩ			

A-7-10 Low Level Contact Resistance (mΩ)

样品编号	A1	A2	A3	A4	A5	A6	A7	A8	A9	A10	A11	A12
A7-1	25.9	28.9	29.6	35.1	22.5	25.6	23.9	25.8	24.6	25.8	23.1	26.5
A7-2	21.5	22.7	23.9	29.1	21.9	24.7	25.6	23.2	22.4	23.3	23.1	29.7
A7-3	23.6	24.1	24.1	24.2	23.7	21.7	22.1	24.8	23.6	22.8	23.5	23.3
A7-4	27.7	22.5	25.1	28.9	24.5	26.6	23.7	24.9	22.8	22.7	23.1	21.4
A7-5	22.5	24.1	31.3	30.6	24.1	24.2	23.3	23.9	23.1	23.1	23.2	22.6
样品编号	B1	B2	B3	B4	B5	B6	B7	B8	B9	B10	B11	B12
A7-1	22.8	22.1	22.6	31.6	24.3	23.3	23.7	22.2	23.4	22.6	20.5	20.6
A7-2	21.9	21.5	22.4	29.3	25.1	27.1	24.9	28.2	28.7	24.6	21.8	21.1
A7-3	21.3	23.6	29.1	24.2	22.5	23.3	22.3	23.7	23.4	22.9	22.7	21.4
A7-4	23.1	26.9	25.7	31.9	27.7	25.1	23.9	23.1	30.1	22.7	22.1	23.6
A7-5	23.8	22.3	24.5	31.5	25.4	24.8	31.7	27.6	25.4	21.8	21.2	22.6

8.4. Clause 3.7.8.2 Dielectric withstanding voltage

A-7-1 Dielectric withstanding voltage				
Testing Period	**Measure environment**		**Test Engineer**	**Test Result**
2022/01/05	Temperature(℃)	21.6	Ge Xinglin	**Pass**
	Humidity (RH)	71.1 %		
Test condition	Mated；100 VAC (RMS), 1 min. The test voltage shall be applied between adjacent contacts.			
Criteria	A failure is the occurrence of a disruptive discharge as evidenced by flashover (surface discharge), sparkover (air discharge), breakdown (puncture discharge) or leakage in excess of 5 mA			

A-7-11 Dielectric withstanding voltage				
Testing Period	**Measure environment**		**Test Engineer**	**Test Result**
2022/01/13	Temperature(℃)	21.8	Ge Xinglin	**Pass**
	Humidity (RH)	46.8 %		
Test condition	Mated；100 VAC (RMS), 1 min. The test voltage shall be applied between adjacent contacts.			
Criteria	A failure is the occurrence of a disruptive discharge as evidenced by flashover (surface discharge), sparkover (air discharge), breakdown (puncture discharge) or leakage in excess of 5 mA			

8.5. Clause 3.7.8.3 Insulation Resistance

A-7-12 Insulation Resistance				
Testing Period	**Measure environment**		**Test Engineer**	**Test Result**
2022/01/13	Temperature(℃)	21.7	Ge Xinglin	**Pass**
	Humidity (RH)	47.1 %		
Test condition	Mated and Unmated, 500 Vdc, 2min. The test voltage shall be applied between adjacent contacts.			
Criteria	≥100MΩ			

A-7-12 Insulation Resistance Mated					
Sample Coding / Test contacts	A7-1	A7-2	A7-3	A7-4	A7-5
A4 to A5	＞100MΩ	＞100MΩ	＞100MΩ	＞100MΩ	＞100MΩ
A5 to A6	＞100MΩ	＞100MΩ	＞100MΩ	＞100MΩ	＞100MΩ
A6 to A7	＞100MΩ	＞100MΩ	＞100MΩ	＞100MΩ	＞100MΩ
B4 to B5	＞100MΩ	＞100MΩ	＞100MΩ	＞100MΩ	＞100MΩ
B5 to B6	＞100MΩ	＞100MΩ	＞100MΩ	＞100MΩ	＞100MΩ
Note: Followed by the specific resistance value.					

8.6. Clause 3.7.8.4 Contact Current Rating

B-6-1 Contact Current Rating				
Testing Period	**Measure environment**		**Test Engineer**	**Test Result**
2022/01/05	Temperature(℃)	22.4	Ge Xinglin	**Pass**
	Humidity (RH)	73.3 %		
Test condition	1、5A applied collectively to VBUS pins（i.e.,pins A4,A9,B4,and B9）. 2、0.5 A applied to the VCONN pin（i.e.,B5）,terminated. 3、0.25 A applied individually to all the other contacts.			
Criteria	The temperature rise shall not exceed 30°C at the outside surface of the shell.			

Test data:			
B-6-1 Contact Current Rating			
Sample Coding	Ambient temperature (℃)	Thermocouple temperature (℃)	Temperature rise (℃)
B6-1	22.4	42.3	19.9
B6-2	22.4	43.4	21.0
B6-3	22.4	43.1	20.7
Note: Temperature rise of sample = Thermocouple temperature - Ambient temperature.			

8.7. Clause 3.8.1.1 Insertion force

A-7-4 Insertion Force				
Testing Period	**Measure environment**		**Test Engineer**	**Test Result**
2022/01/10	Temperature(℃)	21.6	Ge Xinglin	**Pass**
	Humidity (RH)	67.6 %		
Test condition	Speed：12.5mm/min；Insertion depth：4.8mm			
Criteria	Insertion force:5N～20N			

Test data:

A-7-4 Insertion Force

样品编号	A7-1	A7-2	A7-3	A7-4	A7-5
插入力	10.2	10.7	13.5	9.3	8.1

8.8. Clause 3.8.1.2 Extraction force

A-7-5 Extraction Force				
Testing Period	**Measure environment**		**Test Engineer**	**Test Result**
2022/01/10	Temperature(℃)	21.6	Ge Xinglin	**Pass**
	Humidity (RH)	67.6 %		
Test condition	Speed：12.5mm/min；Extraction depth：4.8mm.			
Criteria	Extraction force：8N～20N(Initial reading)			

A-7-7 Extraction Force				
Testing Period	**Measure environment**		**Test Engineer**	**Test Result**
2022/01/10	Temperature(℃)	21.6	Ge Xinglin	**Pass**
	Humidity (RH)	67.1 %		
Test condition	Speed：12.5mm/min；Extraction depth：4.8mm			
Criteria	Extraction force：8N～20N；33% of the initial reading.			

A-7-9 Extraction Force				
Testing Period	**Measure environment**		**Test Engineer**	**Test Result**
2022/01/12	Temperature(℃)	20.8	Ge Xinglin	**Pass**
	Humidity (RH)	48.5 %		
Test condition	Speed：12.5mm/min；Extraction depth：4.8mm			
Criteria	Extraction force：6N～20N.			

Test data:

A-7-5 Extraction Force

样品编号	A7-1	A7-2	A7-3	A7-4	A7-5
拔出力	14.7	17.6	15.4	16.5	17.2

A-7-7 Extraction Force

样品编号	A7-1	A7-2	A7-3	A7-4	A7-5
拔出力	~~15.~~ 16.0	16.2	14.4	15.7	16.4
变化范围	8.8%	8.0%	6.5%	4.8%	4.7%

A-7-9 Extraction Force

样品编号	A7-1	A7-2	A7-3	A7-4	A7-5
拔出力	8.1	8.3	8.1	7.3	6.1

Clause 3.8.1.3 Durability

A-1-2 Durability				
Testing Period	**Measure environment**		**Test Engineer**	**Test Result**
2022/01/05	Temperature(℃)	21.7	Zhan Xingcheng	**Pass**
	Humidity (RH)	61.7 %		
Test condition	Auto cycle；cycle rate: 500±50/h；Number of cycles: 50.			
Criteria	No evidence of physical damages.			

A-2-2 Durability				
Testing Period	**Measure environment**		**Test Engineer**	**Test Result**
2022/01/05	Temperature(℃)	21.5	Zhan Xingcheng	**Pass**
	Humidity (RH)	72.4 %		
Test condition	Auto cycle；cycle rate: 500±50/h；Number of cycles: 50.			
Criteria	No evidence of physical damages.			

A-3-2 Durability				
Testing Period	**Measure environment**		**Test Engineer**	**Test Result**
2021/12/31	Temperature(℃)	20.1	Ge Xinglin	**Pass**
	Humidity (RH)	60.7 %		
Test condition	Auto cycle；cycle rate: 500±50/h；Number of cycles: 50.			
Criteria	No evidence of physical damages.			

A-4-2 Durability				
Testing Period	**Measure environment**		**Test Engineer**	**Test Result**
2021/12/31	Temperature(℃)	20.1	Zhan Xingcheng	**Pass**
	Humidity (RH)	60.9 %		
Test condition	Auto cycle；cycle rate: 500±50/h；Number of cycles: 50.			
Criteria	No evidence of physical damages.			

A-7-3 Durability				
Testing Period	**Measure environment**		**Test Engineer**	**Test Result**
2022/01/07	Temperature(℃)	24.7	Ge Xinglin	**Pass**
	Humidity (RH)	67.5 %		
Test condition	Manual mating/unmating 4 cycles.			
Criteria	No evidence of physical damages.			

A-7-6 Durability				
Testing Period	**Measure environment**		**Test Engineer**	**Test Result**
2022/01/10	Temperature(℃)	21.6	Ge Xinglin	**Pass**
	Humidity (RH)	68.0 %		
Test condition	Manual mating/unmating 25 cycles.			
Criteria	No evidence of physical damages.			

A-7-8 Durability				
Testing Period	**Measure environment**		**Test Engineer**	**Test Result**
2022/01/10	Temperature(℃)	21.5	Ge Xinglin	**Pass**
	Humidity (RH)	64.5 %		
Test condition	Auto cycle；cycle rate：500±50/h；Number of cycles：10000. 2468 cycles (normal) + 2500 cycles (Rotate the receptacle 180º) + 2500 cycles (normal) + 2500 cycles (Rotate the receptacle 180º)			
Criteria	No evidence of physical damages.			

8.9. Clause 3.8.1.3 Reseating

A-1-5 Re-seating				
Testing Period	**Measure environment**		**Test Engineer**	**Test Result**
2022/01/12	Temperature(℃)	20.5	Zhan Xingcheng	**Pass**
	Humidity (RH)	54.8 %		
Test condition	Manual mating/unmating 3 cycles.			
Criteria	No evidence of physical damages.			

A-2-7 Re-seating				
Testing Period	**Measure environment**		**Test Engineer**	**Test Result**
2022/01/17	Temperature(℃)	21.7	Zhan Xingcheng	**Pass**
	Humidity (RH)	70.5 %		
Test condition	Manual mating/unmating 3 cycles.			
Criteria	No evidence of physical damages.			

A-4-9 Re-seating				
Testing Period	**Measure environment**		**Test Engineer**	**Test Result**
2022/01/08	Temperature(℃)	21.3	Zhan Xingcheng	**Pass**
	Humidity (RH)	64.1 %		
Test condition	Manual mating/unmating 3 cycles.			
Criteria	No evidence of physical damages.			

8.10. Clause 3.8.1.6 4-Axis Continuity

B-1-4 4-Axis Continuity				
Testing Period	**Measure environment**		**Test Engineer**	**Test Result**
2022/01/07	Temperature(℃)	22.4	Ge Xinglin	**Pass**
	Humidity (RH)	66.3 %		
Test condition	Mated，20N Force at 15 mm from receptacle shell mating edge. Duration：10 seconds；Direction：0, 90, 180, 270.			
Criteria	No discontinuities greater than 1.0 microsecond during 10 seconds at each axis.			

8.11. Clause 3.8.2 Temperature life

A-1-3 Temperature Life				
Testing Period	**Measure environment**		**Test Engineer**	**Test Result**
2022/01/05-2022/01/10	Temperature(℃)	21.1	Zhan Xingcheng	**Pass**
	Humidity (RH)	61.7 %		
Test condition	Mated；Temperature：105±2℃；Duration：120h.			
Criteria	No evidence of physical damages.			

A-3-3 Temperature Life				
Testing Period	**Measure environment**		**Test Engineer**	**Test Result**
2021/12/31-2022/01/03	Temperature(℃)	20.1	Ge Xinglin	**Pass**
	Humidity (RH)	60.7 %		
Test condition	Mated；Temperature：105±2℃；Duration：72h.			
Criteria	No evidence of physical damages.			

A-4-3 Temperature Life				
Testing Period	**Measure environment**		**Test Engineer**	**Test Result**
2021/12/31-2022/01/03	Temperature(℃)	20.1	Zhan Xingcheng	**Pass**
	Humidity (RH)	60.9 %		
Test condition	Mated；Temperature：105±2℃；Duration：72h.			
Criteria	No evidence of physical damages.			

8.12. Clause 3.8.2 Thermal shock

A-2-3 Thermal Shock				
Testing Period	**Measure environment**		**Test Engineer**	**Test Result**
2022/01/05-2022/01/06	Temperature(℃)	21.1	Zhan Xingcheng	**Pass**
	Humidity (RH)	61.9 %		
Test condition	Mated； -55^{0}_{-5} ℃ to 85^{+3}_{0} ℃, 10 cycles. 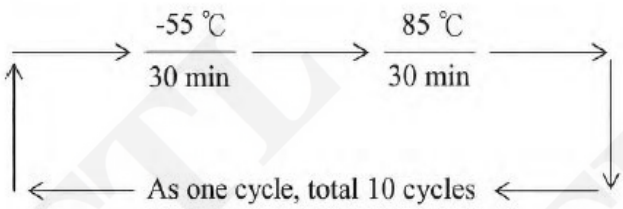 High/low temperature transfer time within 5 min.			
Criteria	No evidence of physical damages.			

8.13. Clause 3.8.2 Cyclic temperature and humidity

A-2-5 Cyclic temperature and humidity				
Testing Period	**Measure environment**		**Test Engineer**	**Test Result**
2022/01/06-2022/01/09	Temperature(℃)	24.1	Zhan Xingcheng	**Pass**
	Humidity (RH)	71.1 %		
Test condition	Mated; Temperature of 25℃±3℃ relative humidity of 80% ±3% to Temperature of 65℃±3℃ relative humidity of 50% ±3% , Thermal ramp time 0.5 hour , maintain 1 hour, 24 cycles。 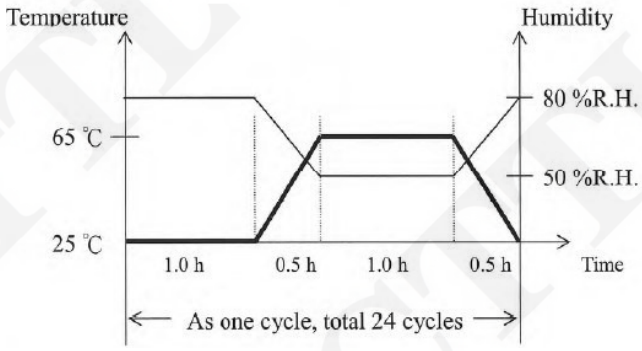			
Criteria	No evidence of physical damages.			

8.14. Clause 3.8.2 Vibration

A-3-5 Vibration				
Testing Period	**Measure environment**		**Test Engineer**	**Test Result**
2022/01/10	Temperature(℃)	22.3	Ge Xinglin	**Pass**
	Humidity (RH)	60.0 %		
Test condition	Mated; random vibration; Frequency:20-500Hz; 15min./axis for 3 axis (X,Y,Z); Power spectral density:0.02g^2/Hz, Acceleration:3.1grms.			
Criteria	No evidence of physical damages. No discontinuities of 1us or greater duration happened			

8.15. Clause 3.8.2 Mixed flowing gas

A-4-5 Mixed flowing gas				
Testing Period	**Measure environment**		**Test Engineer**	**Test Result**
2022/01/07-2022/01/14	Temperature(℃)	21.1	Zhan Xingcheng	**Pass**
	Humidity (RH)	62.9 %		
Test condition	CL2:(10±3) ppb； No2:(200±50) ppb； H2S:(10±5) ppb SO2:(100±20) ppb； Temperature:(30±1)℃； Humidity:(70±2)%RH 1/3 days and then unmated for 2/3 days. The others are exposed mated for full 7 days test period.			
Criteria	No evidence of physical damages.			

8.17. Clause 3.8.2 Thermal disturbance

A-4-7 Thermal disturbance				
Testing Period	**Measure environment**		**Test Engineer**	**Test Result**
2022/01/17-2022/01/18	Temperature(℃)	24.1	Zhan Xingcheng	**Pass**
	Humidity (RH)	71.1 %		
Test condition	Mated Cycle the connector or socket between 15 °C ± 3 °C and 85 °C ± 3 °C, as measured on the part. Ramps should be a minimum of 2 °C per minute, and dwell times should insure that the contacts reach the temperature extremes (a minimum of 5 minutes). Humidity is not controlled. Perform 10 such cycles.			
Criteria	No evidence of physical damages.			

9. Test Equipments Utilized

Name	Model	Serial number	Calibration Date	Expire Date
Oven Machine（ESPEC）	LC-213	1010170239	2021.12.12	2022.12.11
Oven Machine（ESPEC）	LC-213	1010170285	2021.12.12	2022.12.11
Thermal Shock Chamber(ESPEC)	TSE-12-A	161003228	2021.12.12	2022.12.11
Temperature & Humidity Chamber	GPL-2	0010-003613	2021.12.12	2022.12.11
Mixed Flow Gas Chamber(Yamasaki)	GH-180/VL	705	2021.12.1	2022.11.30
Vibration machine	V455-PAL1000 L	1020385-1	2021.12.1	2022.11.30
Durability Tester	YH-8816USDT	17068816076	2021.12.1	2022.11.30
Durability Tester	YH-8816USDT	17068816077	2021.12.1	2022.11.30
Durability Tester	YH-8816USDT	17068816078	2021.12.1	2022.11.30
Durability Tester	YH-8816USDT	17068816079	2021.12.1	2022.11.30
4-axis Tester	YH-8812WEXT	17068812429	2021.12.1	2022.11.30
4-axis Tester	YH-8812WEXT	17068812430	2021.12.1	2022.11.30
Microscope	MM-400/L	3413948	2021.12.1	2022.11.30
Micro-ohmmeter	RM3545	170938239	2021.12.1	2022.11.30
Electronic load meter	63610-80-20	636001001093	2021.12.1	2022.11.30
Electronic load meter	63610-80-20	636001001094	2021.12.1	2022.11.30
DC power supply	9202B	652E22230	2021.12.1	2022.11.30

Temperature rise test system	GP10	S5T909482	2021.12.1	2022.11.30
Moment disconnection tester	NM11B	20010112	2021.12.6	2022.12.5
Electrical Safety Analyzer	TOS9201	XK002479	2021.12.1	2022.11.30
AVO meter	87VC	37980325WS	2021.12.10	2022.12.9

ANNEX A: UUT photograph

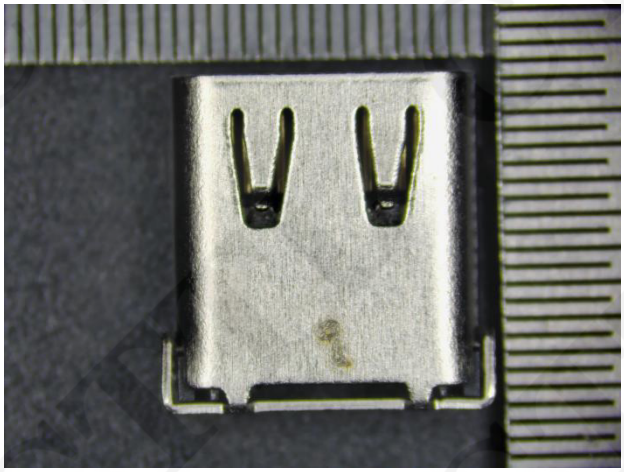	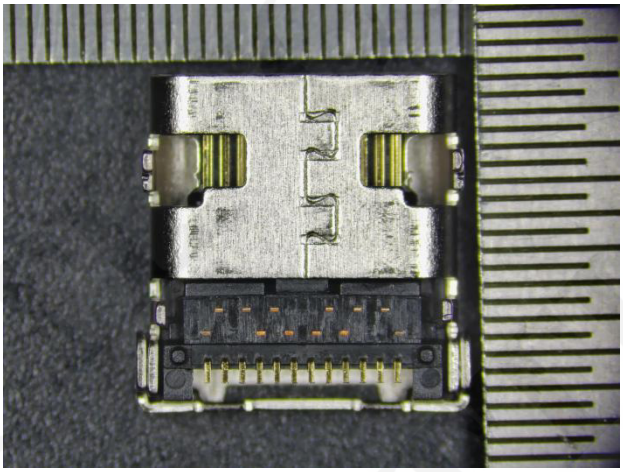
Top	Bottom
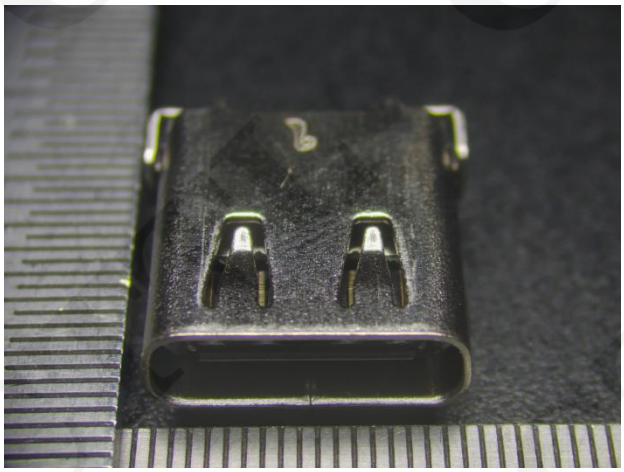	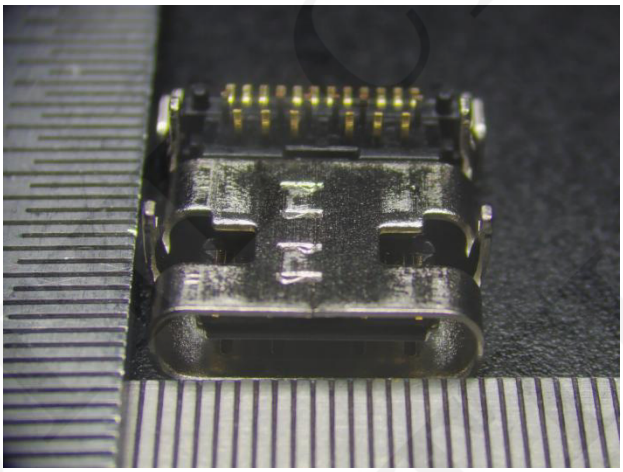
Top	Bottom
	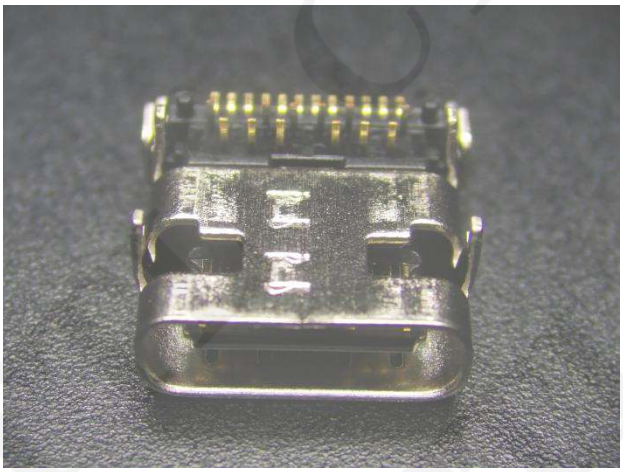
Receptacle	Receptacle

ANNEX B: Drawing

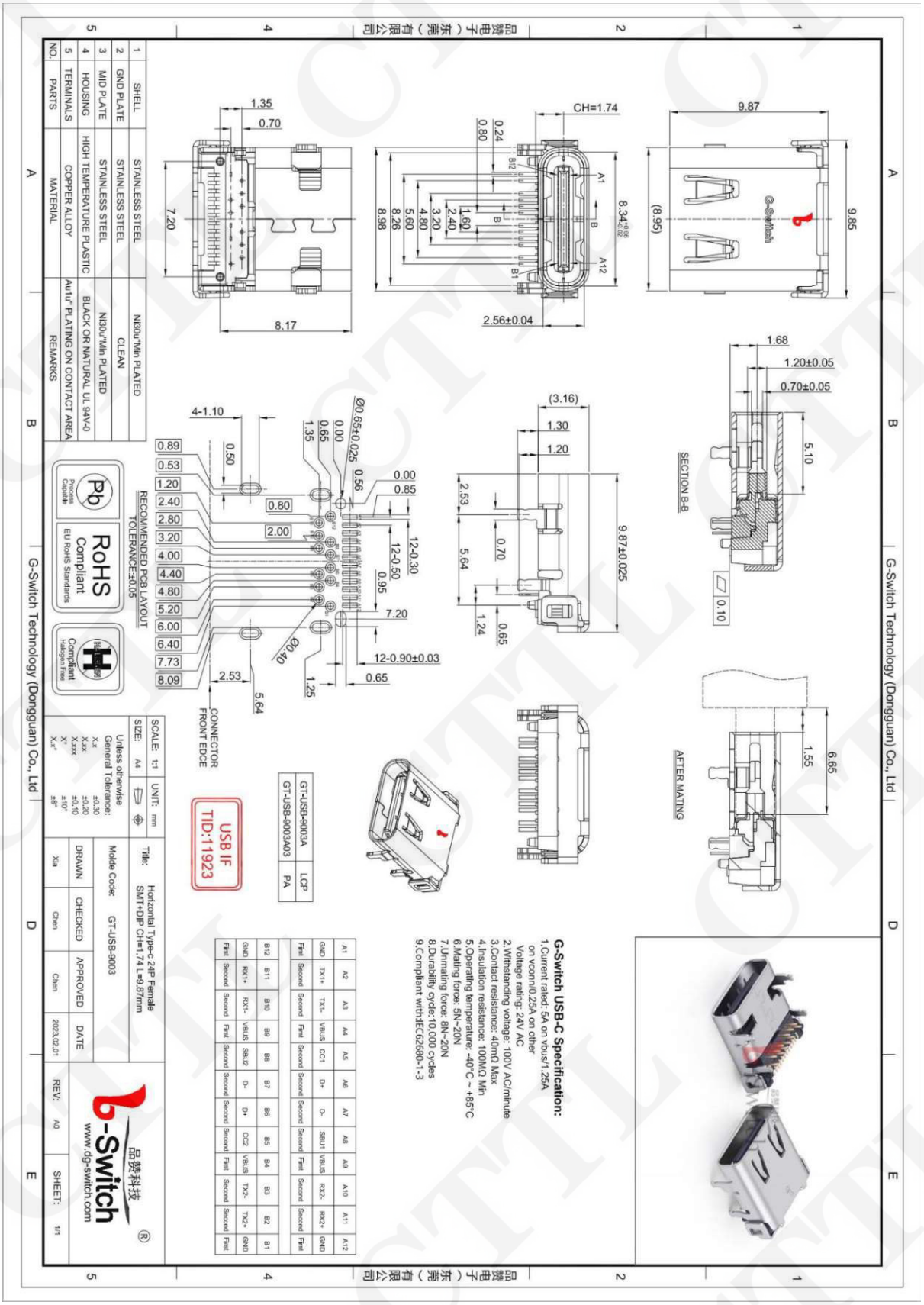

ANNEX C: Insertion Force & Extraction Force Test Layout

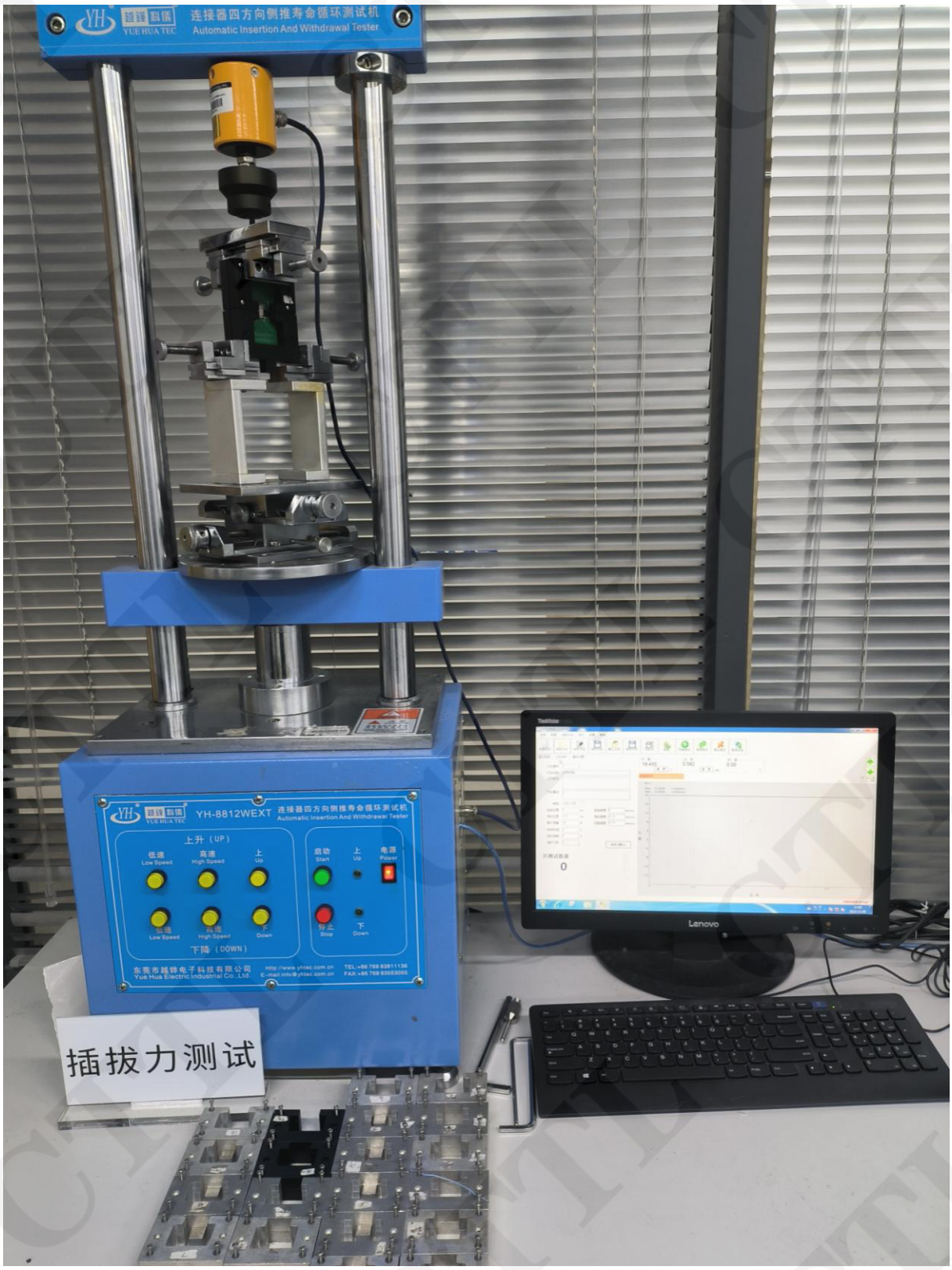

ANNEX D: Durability Test Layout

ANNEX E: Dielectric withstanding voltage Test Layout

ANNEX F: Vibration Test Layout

ANNEX G: Contact Current Rating Test Layout

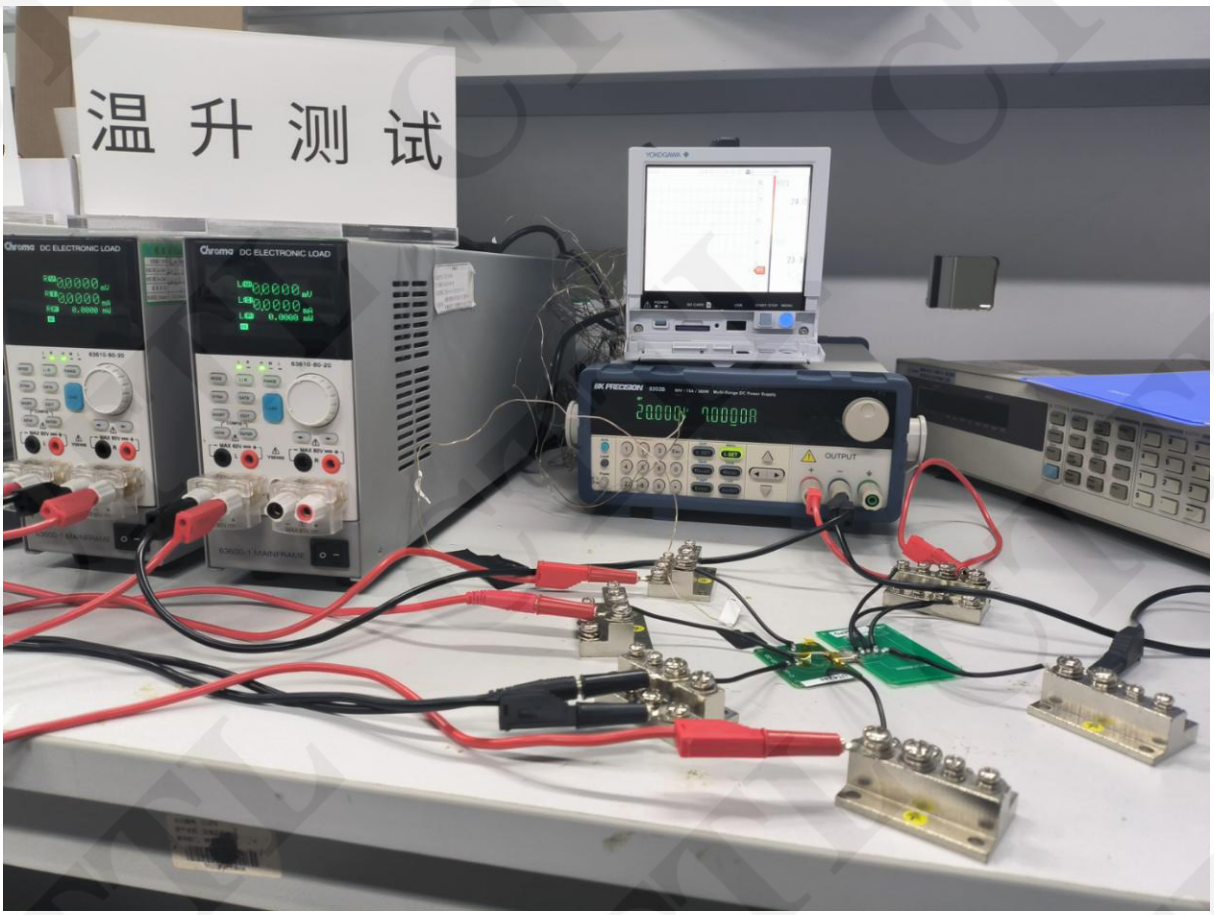

*****END OF REPORT*****