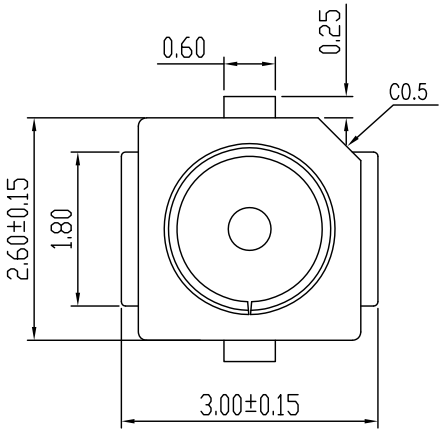

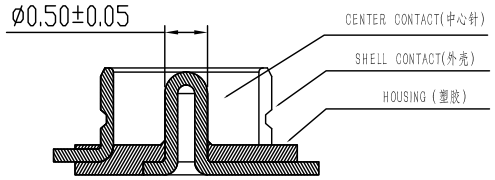

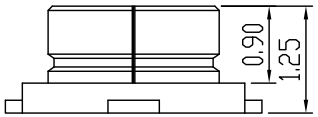

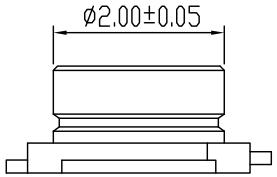

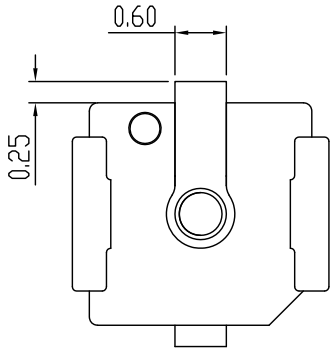

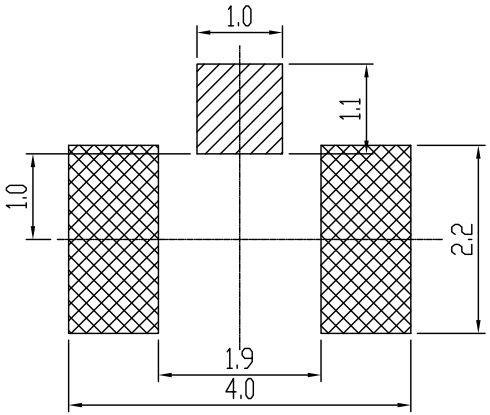

RECOMMENDED PCB LAYOUT

(TOLERANCE:±0.05)

NOTES(备注) :

1.0. RATING(额定值) :

1.1. VOITAGE(电压) :60 VAC (R.M.S.)

1.2. NOMINAL CHARACTERISTIC IMPEDANCE(特性阻抗) : 50 Ohm

1.3. APPLICABLE FREQUENCY (适用频率) : DC ~ 6GHz

1.4. VSWR(电压驻波比) : 1.3 MAX. (DC~3GHz), 1.5 MAX. (3~6GHz)

1.5. TEMPERATURE(适用温度) :-40° C TO +85° C

1.6. APPLIED TO IR SOLDERING PROCESS(适用回流焊接方式)

2.0. MATERIAL SEE BILL OF MATERIAL (材料清单) :

2.1.HOUSING (塑胶) : THERMOPLASTIC LCP,UL94V-0(LCP符合UL94V-0) ,

2.2.CENTER CONTACT(中心端子) : COPPER ALLOY C5191(铜合金C5191).

2.3.SHELL CONTACT (外壳) : COPPER ALLOY C5191(铜合金C5191) .

CENTER CONTACT

GROUND CONTACT

————		new		2015/5/3		A	瀚源
ECN BO.		DESCRIPTION.		DATE.		REV.	
DESIGNED	CHECKED	APPROVAL	DRAWING NUMBER			SCALT: 1/2	SCALE: 3:1
Mikey	Tom	Jerry	PART NAME	IPEX-1	UNLESS OTHERWISE SPECIFIED,TOLERANCE:		X. ±0.25 X.x ±0.20 X.xx ±0.15 ANGULAR ±3°
			MODEL NAME	IPEX-1			
			3RD ANGLE PROJ	HanElectricity Co.,LTD			FILE.NO.