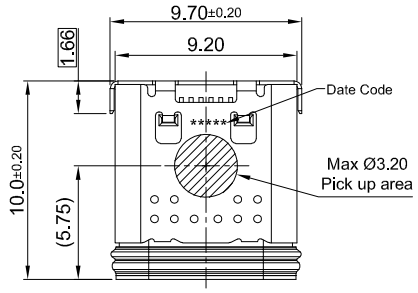

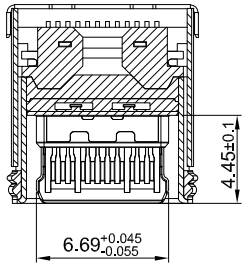

SECTION:B-B

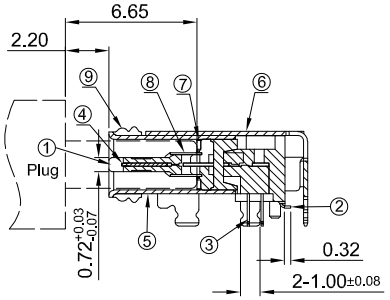

SECTION:A-A

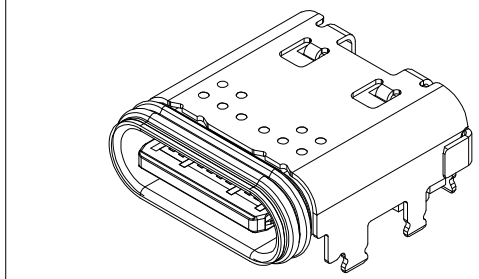

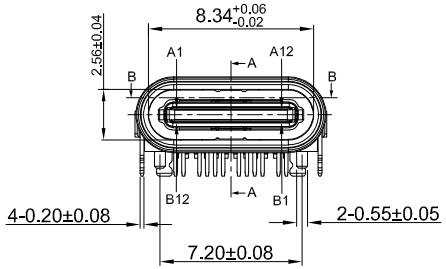

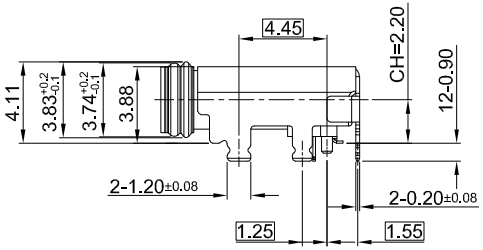

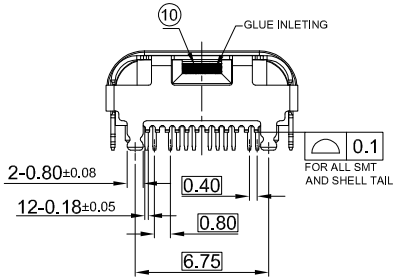

G-Switch USB-C Specification:

1.Current rated: 5A on vbus/1.25A
on vconn/0.25A on other
Voltage rating: 24V AC
2.Withstanding voltage: 100V AC/minute
3.Contact resistance: 40mΩ Max
4.Insulation resistance: 100MΩ Min
5.Operating temperature: -40°C ~ +85°C
6.Mating force: 5N~20N
7.Unmating force: 8N~20N
8.Durability cycle:10,000 cycles
9.Data transmission rate up to 10Gbp/s
10.Waterproof grade: IP-X7.
11.Compliant with: IEC62680-1-3

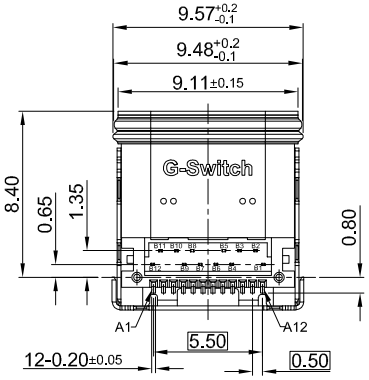

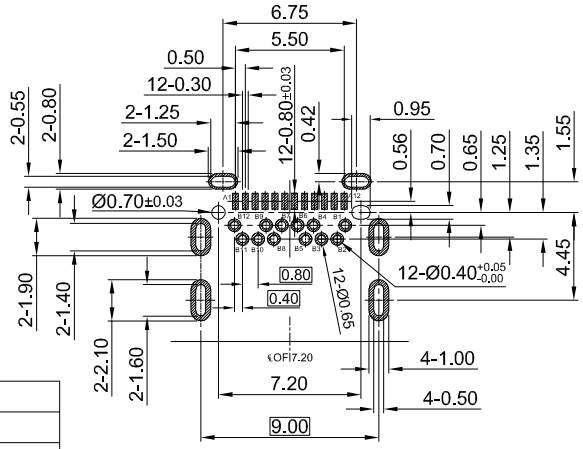

RECOMMENDED PCB LAYOUT
TOLERANCE:±0.05

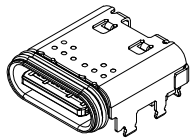

A1	A2	A3	A4	A5	A6	A7	A8	A9	A10	A11	A12
GND	TX1+	TX1-	VBUS	CC1	D+	D-	SBU1	VBUS	RX2-	RX2+	GND
First	Second	Second	First	Second	Second	Second	Second	First	Second	Second	First
B12	B11	B10	B9	B8	B7	B6	B5	B4	B3	B2	B1
GND	RX1+	RX1-	VBUS	SBU2	D-	D+	CC2	VBUS	TX2-	TX2+	GND
First	Second	Second	First	Second	Second	Second	Second	First	Second	Second	First

NO.	PARTS	MATERIAL	REMARKS
10	ADHESIVE	EPOXY RESIN	--
9	O-RING	RUBBER	BLACK
8	GND PLATE	SUS301	--
7	INSIDE PLATE	SUS304	--
6	SHELL-2	SUS304	Ni30u"MIN PLATED
5	SHELL-1	SUS316	--
4	MIDDLE METAL	SUS304	Ni30u"MIN PLATED
3	CONTACT(B1~B12)	C7025	Au1u"MIN PLATING ON CONTACT AREA G/F PLATING ON SOLDER AREA
2	CONTACT(A1~A12)	C7025	Au1u"MIN PLATING ON CONTACT AREA Sn30u"MIN PLATING ON SOLDER AREA
1	MOLDING	PA46	BLACK UL 94 V-0

Pb Process Capable

RoHS Compliant EU RoHS Standards

HALOGEN Compliant Halogen Free

SCALE: 1:1	UNIT: mm	Title:	IPX7 Horizontal Type-c 24P Female DIP+SMT CH=2.2 L=10.0mm				
SIZE: A4							
Unless otherwise General Tolerance:		Molde Code:	GT-USB-9108A				
X.x	±0.30						
X.xx	±0.20						
X.xxx	±0.10						
X.x°	±3°						
X.xx°	±2°	DRAWN	CHECKED	APPROVED	DATE	REV: A0	SHEET: 1/1
		Xia	Chen	Chen	2024.03.10		

品赞科技 b-Switch ® www.dg-switch.com

品赞电子（东莞）有限公司