REV.	ECN NO.	REVISED	DATE

RoHs 环保

A型

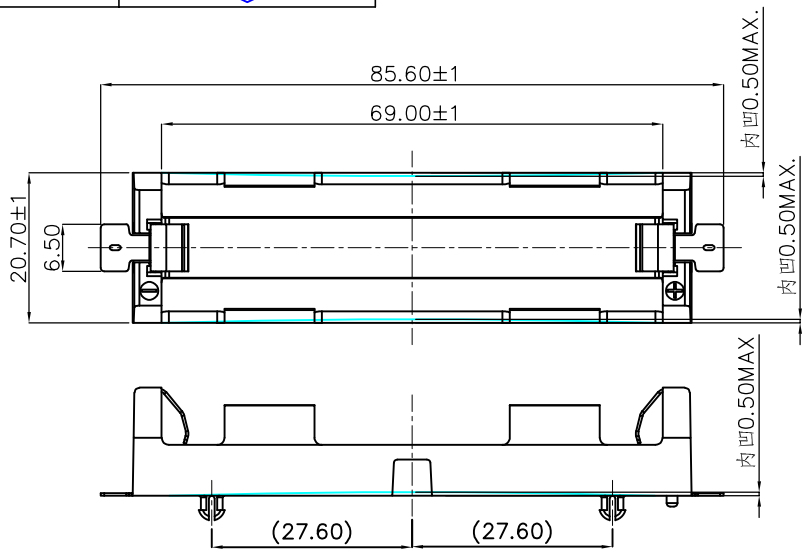

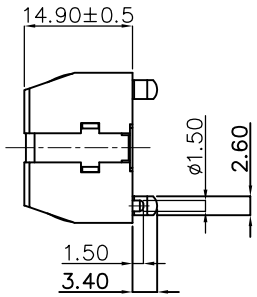

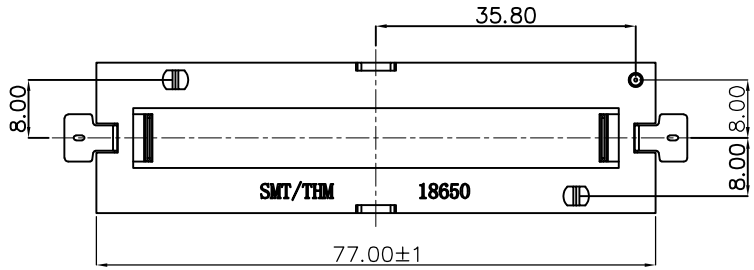

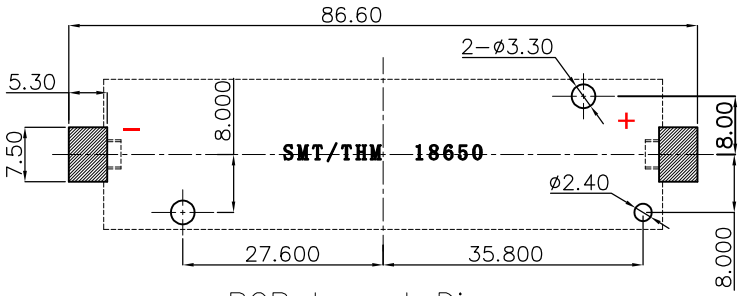

PCB Layout Diagram

TOP View

NOTE:

1.MATERIAL:

a.HOUSING:PA46 UL94 V-0 BLACK

b.CONTACT: SUS304 T=0.35MM

(SURFACE PLATING: Au1u")

SEE ORDERING INFORMATION

2.ELECTRIC:

a.DIELECTNIC VOLTAGE: 500V AC ONE MINUTE

b.OPERATING TEMPERATURE: -25°C~ +85°C

ORDERING INFORMATION

BH-18650-B6AA008

电池盒

电池型号

SMT 180° TYPE

PLATING:
A-Au1U"
J-Ni100U"~120U"
K-Sn100U"~120U"

MATERIAL:
1A-PBT BLACK
1B-PA66 BLACK
2A-PPA BROWN
2B-PPA BLACK
3A-PPS BROWN
3B-PPS BLACK
4A-LCP WHITE
4B-LCP BLACK
5A-PA9T BLACK
6A-PA46 BLACK

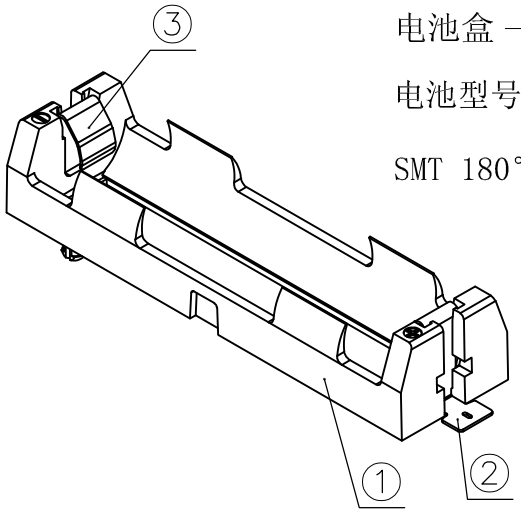

工程部
2023-05-30
LQ. HUANG

NO.	PART NAME	Q'TY	MATERIAL	PLATING & COLOR
3	TERMINAL(-)	1	SUS304 T=0.35MM	Au(1u")-Plating
2	TERMINAL(+)	1	SUS304 T=0.35MM	Au(1u")-Plating
1	HOUSING	1	PA46 UL94 V-0	BLACK

UNLESS OTHERWISE SPECIFIED TOLERANCES

DECIMALS: X :±0.30, X.X :±0.25, X.XX :±0.20, X.XXX :±0.10

ANGLES: X :±1°, X.X :±0.5°

WEIGHT:

SHEET 1 OF 1

MYOUNG 美阳 www.meiyangdz.com

DSND	Lieqinghuang	DATE	2023-09-01
CHKD	ZhouRuicai	DATE	2023-09-01
APVD	XueShunyong	DATE	2023-09-01
SCALE:	SIZE: A4	VIEW:	
UNIT: mm	REV.: A/0	OBJECT: MY	

TITLE: 电池盒BH-18650-1J Au SMT带柱 双负极弹片

PART NO.: BH-18650-B6AA008

DRAW NO.:MY-CP-0374