标 记 MARK	ECN编号/变更内容 ECN NO/DEFINITION	修 改 REVISE	日 期 DATE	核 准 APPROVE

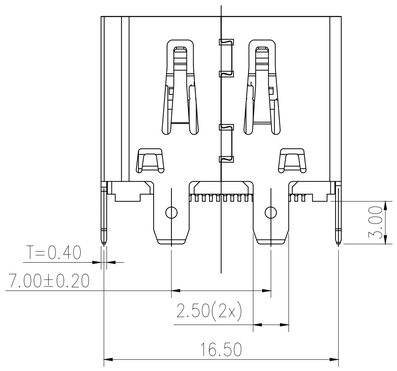

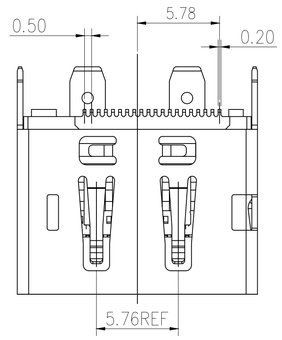

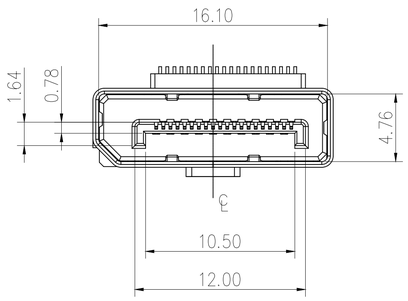

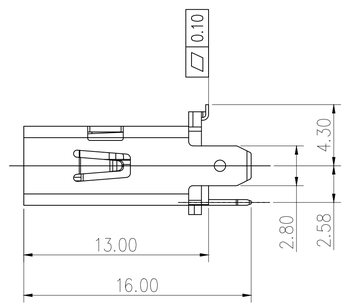

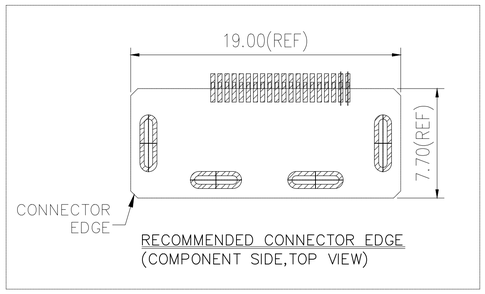

PIN Number	Signal Type	Pin Name
1	In/Out	ML_Lane 3(n)/ML_Lane 0(p)
2	GND	GND
3	In/Out	ML_Lane 3 (p)/ML_Lane 0 (n)
4	In/Out	ML_Lane 2 (n)/ML_Lane 1 (p)
5	GND	GND
6	In/Out	ML_Lane 2 (p)/ML_Lane 1 (n)
7	In/Out	ML_Lane 1 (n)/ML_Lane 2 (p)
8	GND	GND
9	In/Out	ML_Lane 1 (p)/ML_Lane 2 (n)
10	In/Out	ML_Lane 0 (n)/ML_Lane 3 (p)
11	GND	GND
12	In/Out	ML_Lane 0 (p)/ML_Lane 3 (n)
13	CONFIG (see note1)	CONFIG1
14	CONFIG (see note1)	CONFIG2
15	I/O	AUX CH (p)
16	GND	GND
17	I/O	AUX CH (n)
18	Out/In	Hot Plug Detect
19	RTN	Return
20	Power Out/PWR Out (see note2)	DP_PWR

NOTE:
1. MATERIAL:
HOUSING: LCP, COLOR: BLACK
COVER: THERMOPLASTICS, COLOR: BLACK
CONTACT: BRASS;
SHELL: STAINLESS STEEL;
2. FINISH:
CONTACT: CONTACT AREA AU(GF) PLATED
MATTE Tin 80u" MIN. PLATED ON SOLDER TAILS,
NICKEL 50u" MIN. UNDERPLATING OVER ALL.
SHELL: NICKEL 50u" MIN. UNDERPLATING OVER ALL.
3. SPECIFICATION:
3.1: ELECTRICAL:
INSULATION RESISTANCE: 100MΩ Min. AT 500V/DC FOR 1MINUTE.
CONTACT RESISTANCE: 30 mΩ Max.
DIELECTRIC WITHSTANDING VOLTAGE:
NO DISCHARGE, FLASHOVER OR BREAKDOWN AT 500V/AC 1MINUTE

Notes:
1) Pin 13 and 14 must be connected to ground through a pull-down device. External devices and cable assemblies must be designed to not rely on a low impedance ground path from these pins.

2) Pin 20,PWR Out,must provide +3.3 volts±10% with a maximum current of 500mA and a minimum power capability of 1.5 watts.

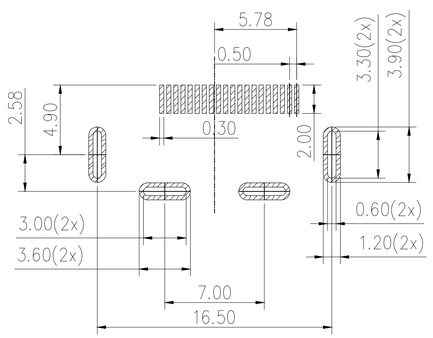

RECOMMENDED DP PCB LAYOUT(COMPONENT SIDE)
THICKNESS=1.60±0.05 (TOP VIEW) DEFAULT TOL ±0.05

1.CONNECTOR SOLDER NOTES:
1-1. RECOMMENDED SOLDERING PADS THICKER 0.12MM MIN FOR GOOD SOLDERING.
1-2. SOLDERING PADS LENGTH AND WIDTH FOLLOW DRAWING ABOVE.
1-3. THE SOLDER PASTE SHOULD BE PRINT FULL SOLDERING PADS AREA.

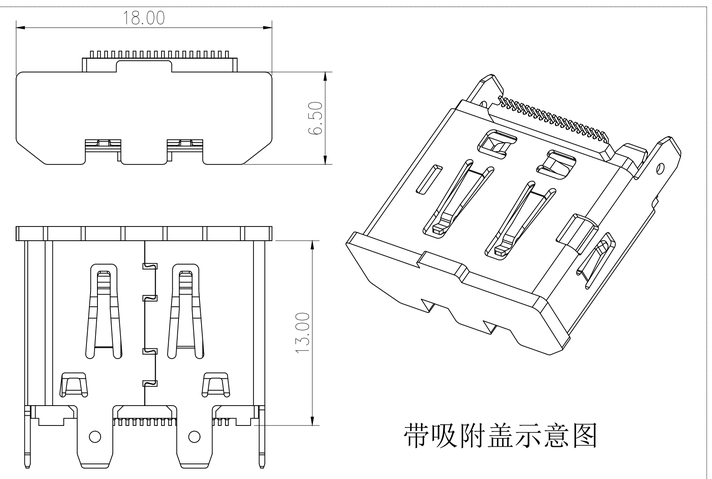

带吸附盖示意图

序 号	品 名	材 质	电镀/颜色	备 注
3	外壳	不锈钢	镀镍	
2	接触	铜	镀金	
1	基座	LCP	黑色	

深圳市虹成电子有限公司		品 名 TITLE	DP 母座	
		料 号 PART NO	HC-DP-20PLT-130C	
GENERAL TOLERANCES (UNLESS SPECIFIED)	比 列 SCALE	1:1		
.X: ±0.38	单 位 UNIT	MM	制 图 DRAW	AhYe
.XX: ±0.25	张 数 PART NO	1 OF 1	审 核 CHECKED	夏操云
.XXX: ±0.10	版 本 REV	A	批 准 APPROVE	赵亮亮
ANGLE: ±2°				