HAOYU

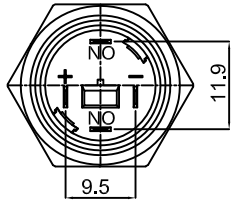

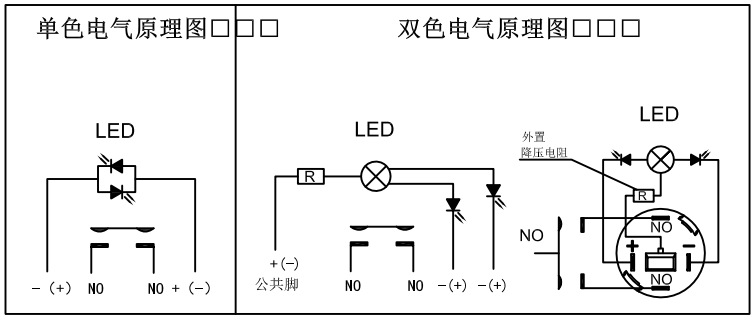

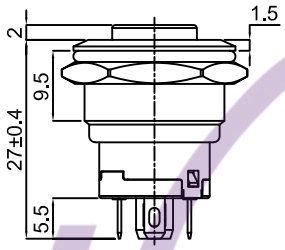

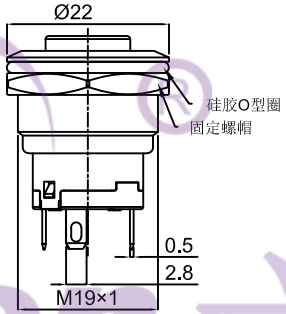

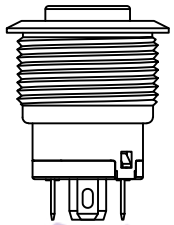

安装视图

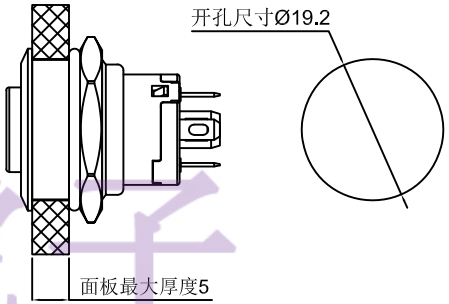

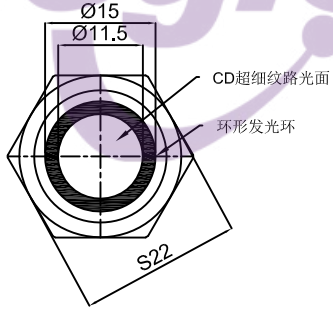

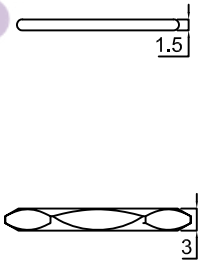

轴视图

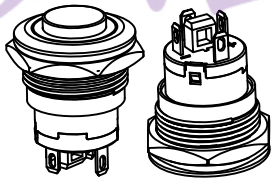

legion 六鈞電子

1.Rating : DC36V 3A.
2.Contact resistance : ≤50mΩ.
3.Insulation resistance : ≥1000MΩ (DC500V).
4.Withstanding voltage : 1500VAC .
5.Operating Force : ≤6N
6.life test : 100000 cycles.
7.Operation temperature range:-25℃~85℃.
8.Sign"* "is importance dimension.

TEL:0769-82310511-867

发光类型:E环形/DY电源符号/D单点状/E+DY环形+电源符号/E+D环形+单点状
发光颜色 : R红/G绿/L蓝/Y黄/W白/O橙/P紫
灯电压 : AC/DC:3V/6V/12V/24V/36V48V/AC:60V/110V/220V

NO.	PART NAME	MATERIAL	QTY	FINISHING
9	NO TERMINAL	BRASS	2	Ag-PLATED
8	LED TERMINAL	BRASS	2	Ag-PLATED
7	CONTACT	SILVER ALLOY	2	
6	HOUSING	PA66	1	BLUE
5	NUT	BRASS	1	Ni-PLATED
4	O-RING	SILICA GEL	1	WHITE
3	SHELL	SUS/BRASS	1	Ni-PLATED
2	BUTTON	SUS	1	
1	LIGHT-EMITTING REGION	PC	1	

TOLERANCE UNLESS SPECIFIED
<1.5: ±0.1mm
>1.5~5.0:±0.25mm
>5.0:±0.3mm
ANGULAR ±1°

NO	DATE	REVISIONS	BY	APPD

TITLE: PUSH SWITCH
MODEL:HY-19E-G10-N-E-R24V-SU-008
UNIT : MM
SCALE: 1:1
ROHS COMPLIANT
DWN
CHK'D
APPD
PRO.AGL:
REV :A0

东莞市六钧电子五金有限公司