SOREDE
索 瑞 達 電 子

# 深圳市索瑞达电子有限公司

# 承 认 书

## SPECIFICATION FOR APPROVAL

客 户 名 称：
Customer Name : 标 准

客 户 料 号：
Customer P/N:

产 品 名 称：
Product Name: 功率电感

索 瑞 达 料 号：
Sorede P/N: SCD.5845.DYF系列

| 制造厂商 Manufacturer | |
|---|---|
| 拟 制 Draft | 黄小香 |
| 审 核 Check | 符妃团 |
| 日 期 Date | 2024-09-21 |

深圳市索瑞达电子有限公司 工 程 专 用 章

| 客户承认印章 Approval Signet | |
|---|---|
| | |
| 日期 Date | |

地址:深圳市观澜镇福城街道新塘村8号源创园陆号A6栋3楼.

Address:3Rd Floor, Building A6, Yuanchuangyuanlu, No. 8 Xintang Village, Fucheng Street, Guanlan Town, Shenzhen.

电话 Tel: 0755-29803356 传真 Fax: 0755-29803506

电子邮件 E-mail: sorde@vip.163.com

网址 http// www.szsorede.com

# 修 改 履 历 表

**Modify Resume**

| 修改日期<br>Date modified | 修 改 明 细<br>Modify Details | 修改后版本号<br>Version No. |
|---|---|---|
| 2018-06-06 | 文件新制订 File formulation | A |
| 2021-07-22 | 更新料号：SR54YF系列改为SCD.5845.DYF系列 | A1 |
| 2023-06-08 | 系列电流更新 | A2 |
| 2024-09-21 | 增加感量 | B |
| | | |
| | | |
| | | |
| | | |
| | | |
| | | |
| | | |
| | | |
| | | |
| | | |
| | | |
| | | |
| | | |
| | | |
| | | |
| | | |
| | | |
| | | |
| | | |
| | | |
| | | |
| | | |
| | | |
| | | |
| | | |
| | | |
| | | |
| | | |
| | | |
| | | |
| | | |

1、外形尺寸 Dimension ：

单位Unit：mm

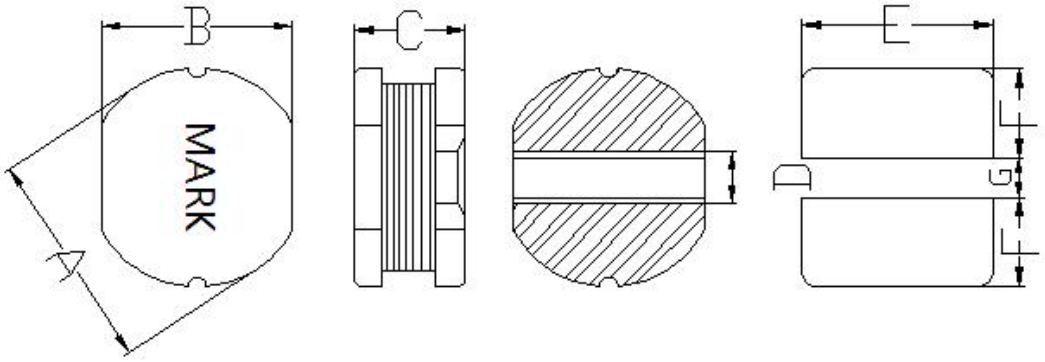


| | |
|---|---|
| A | 5.8±0.3 |
| B | 5.2±0.3 |
| C | 4.5±0.3 |
| D | 1.6Ref. |
| E | 5.8Ref. |
| F | 2.2Ref. |
| G | 1.6Ref. |

2、产品品名构成 Product Spec. Model

SCD . 5845 . D Y F 100 K T 00

a b c d e f g h i

a：系列名称Series name

b：产品尺寸Product dimensions（A x B x C）

c：绕组（D:单线Single Line、C：双线Double Line）

d：密封方式Sealing way (L：冷封Cold seal Y：热封Heat seal)

e: 印字方向 Lettering direction ▶

f: 电感值Inductance Value

(1R0:1.0uH; 100: 10uH; 101:100uH)

g: 电感公差Inductance Tolerance (K:10% ; M:20% ; N:30%)

h: 包装Package(T:磁带/卷轴Tape/Reel、B: 散装Bulk)

i: 编号Numbering（标准standard）

▶ **Lettering direction**

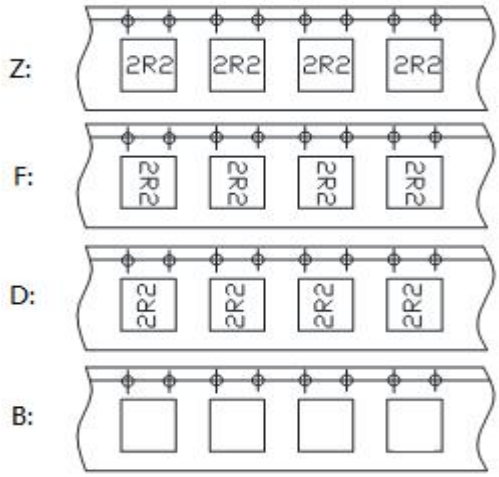


3、结构Structure

4、材料清单MATERIAL LIST

| NO. | PARTS | MATERIAL | UL FILE NO. | TEMP. CLASS |
|---|---|---|---|---|
| 1 | CORE | Ni-Zn CORE OR EQUIVALENT | NA | NA |
| 2 | WIRE | POLYURETHANE ENAMELLED COPPER WIRE OR EQUIVALENT | E258243 | 180℃ |
| 3 | SOLDER | Sn99.3-Cu0.7 OR EQUIVALENT | NA | NA |

*NA:NOT APPLICABLE.

5、电性能参数表 Electrical Characteristics List

| 规格型号 Part NO. | 电感量 Tolerance(μH) | 测试频率 Test Freq. (kHz/v) | 直流电阻 DCR Max (Ω) | 饱和电流 Isat (A) |
|---|---|---|---|---|
| SCD.5845.DYFR30NT00 | 0.30 | 100 / 0.25 | 0.010 | 6.00 |
| SCD.5845.DYFR47NT00 | 0.47 | 100 / 0.25 | 0.011 | 5.60 |
| SCD.5845.DYF1R0NT00 | 1.0 | 100 / 0.25 | 0.018 | 5.40 |
| SCD.5845.DYF1R5MT00 | 1.5 | 100 / 0.25 | 0.024 | 4.70 |
| SCD.5845.DYF2R2MT00 | 2.2 | 100 / 0.25 | 0.031 | 3.80 |
| SCD.5845.DYF2R7MT00 | 2.7 | 100 / 0.25 | 0.033 | 3.40 |
| SCD.5845.DYF3R3MT00 | 3.3 | 100 / 0.25 | 0.035 | 3.10 |
| SCD.5845.DYF3R6MT00 | 3.6 | 100 / 0.25 | 0.040 | 3.10 |
| SCD.5845.DYF3R9MT00 | 3.9 | 100 / 0.25 | 0.045 | 2.90 |
| SCD.5845.DYF4R7MT00 | 4.7 | 100 / 0.25 | 0.052 | 2.80 |
| SCD.5845.DYF5R6MT00 | 5.6 | 100 / 0.25 | 0.060 | 2.40 |
| SCD.5845.DYF6R8MT00 | 6.8 | 100 / 0.25 | 0.068 | 2.20 |
| SCD.5845.DYF8R2MT00 | 8.2 | 100 / 0.25 | 0.076 | 2.00 |
| SCD.5845.DYF100KT00 | 10 | 100 / 0.25 | 0.065 | 1.80 |
| SCD.5845.DYF120KT00 | 12 | 100 / 0.25 | 0.085 | 1.60 |
| SCD.5845.DYF150KT00 | 15 | 100 / 0.25 | 0.096 | 1.45 |
| SCD.5845.DYF180KT00 | 18 | 100 / 0.25 | 0.107 | 1.40 |
| SCD.5845.DYF220KT00 | 22 | 100 / 0.25 | 0.143 | 1.30 |
| SCD.5845.DYF270KT00 | 27 | 100 / 0.25 | 0.169 | 1.10 |
| SCD.5845.DYF330KT00 | 33 | 100 / 0.25 | 0.208 | 1.00 |
| SCD.5845.DYF390KT00 | 39 | 100 / 0.25 | 0.215 | 0.95 |
| SCD.5845.DYF470KT00 | 47 | 100 / 0.25 | 0.315 | 0.90 |
| SCD.5845.DYF500KT00 | 50 | 100 / 0.25 | 0.360 | 0.87 |
| SCD.5845.DYF560KT00 | 56 | 100 / 0.25 | 0.377 | 0.85 |
| SCD.5845.DYF680KT00 | 68 | 100 / 0.25 | 0.415 | 0.75 |
| SCD.5845.DYF820KT00 | 82 | 100 / 0.25 | 0.468 | 0.68 |
| SCD.5845.DYF101KT00 | 100 | 100 / 0.25 | 0.611 | 0.63 |
| SCD.5845.DYF121KT00 | 120 | 100 / 0.25 | 0.754 | 0.53 |
| SCD.5845.DYF151KT00 | 150 | 100 / 0.25 | 0.845 | 0.50 |
| SCD.5845.DYF171KT00 | 170 | 100 / 0.25 | 0.960 | 0.49 |
| SCD.5845.DYF181KT00 | 180 | 100 / 0.25 | 0.975 | 0.48 |
| SCD.5845.DYF221KT00 | 220 | 100 / 0.25 | 1.25 | 0.42 |

※公差Tolerance：N:±30%、M:±20%、K:±10%.

※工作温度Operating temperature rang：-40 ℃ to +105℃（Including Self-heating）

※储存温度Storage termperature rang：-40 ℃ to +125℃

Isat电流：指使电感量比初始值下降10%Max（The rated DC current is that which cause at 10%Max inductance reduction from the initial value ）。

| 规格型号 Part NO. | 电感量 Tolerance(μH) | 测试频率 Test Freq. (kHz/v) | 直流电阻 DCR Max (Ω) | 饱和电流 Isat (A) |
|---|---|---|---|---|
| SCD.5845.DYF271KT00 | 270 | 100 / 0.25 | 1.44 | 0.40 |
| SCD.5845.DYF331KT00 | 330 | 100 / 0.25 | 1.68 | 0.35 |
| SCD.5845.DYF391KT00 | 390 | 100 / 0.25 | 2.60 | 0.30 |
| SCD.5845.DYF471KT00 | 470 | 100 / 0.25 | 2.52 | 0.28 |
| SCD.5845.DYF561KT00 | 560 | 100 / 0.25 | 3.02 | 0.24 |
| SCD.5845.DYF681KT00 | 680 | 100 / 0.25 | 3.50 | 0.23 |
| SCD.5845.DYF801KT00 | 800 | 100 / 0.25 | 4.70 | 0.22 |
| SCD.5845.DYF821KT00 | 820 | 100 / 0.25 | 4.80 | 0.21 |
| SCD.5845.DYF102KT00 | 1000 | 100 / 0.25 | 6.00 | 0.20 |
| SCD.5845.DYF122KT00 | 1200 | 100 / 0.25 | 6.40 | 0.17 |
| SCD.5845.DYF152KT00 | 1500 | 100 / 0.25 | 8.80 | 0.16 |
| SCD.5845.DYF182KT00 | 1800 | 100 / 0.25 | 10.66 | 0.14 |
| SCD.5845.DYF202KT00 | 2000 | 100 / 0.25 | 12.60 | 0.13 |
| SCD.5845.DYF222KT00 | 2200 | 100 / 0.25 | 13.40 | 0.12 |
| SCD.5845.DYF252KT00 | 2500 | 100 / 0.25 | 14.00 | 0.11 |
| SCD.5845.DYF302KT00 | 3000 | 100 / 0.25 | 16.20 | 0.10 |
| SCD.5845.DYF332KT00 | 3300 | 100 / 0.25 | 17.20 | 0.10 |
| SCD.5845.DYF352KT00 | 3500 | 100 / 0.25 | 18.90 | 0.09 |
| SCD.5845.DYF402KT00 | 4000 | 100 / 0.25 | 23.00 | 0.09 |
| SCD.5845.DYF452KT00 | 4500 | 100 / 0.25 | 25.00 | 0.08 |
| SCD.5845.DYF472KT00 | 4700 | 100 / 0.25 | 25.20 | 0.08 |
| SCD.5845.DYF562KT00 | 5600 | 100 / 0.25 | 31.20 | 0.07 |
| SCD.5845.DYF103KT00 | 10000 | 100 / 0.25 | 59.80 | 0.04 |

※公差Tolerance：N:±30%、M:±20%、K:±10%.

※工作温度Operating temperature rang：-40 ℃ to +105℃（Including Self-heating）

※储存温度Storage termperature rang：-40 ℃ to +125℃

Isat电流：指使电感量比初始值下降10%Max（The rated DC current is that which cause at 10%Max inductance reduction from the initial value）。

## 6、产品包装 Packaging

1）载带包装示意图 Tape packing diagram

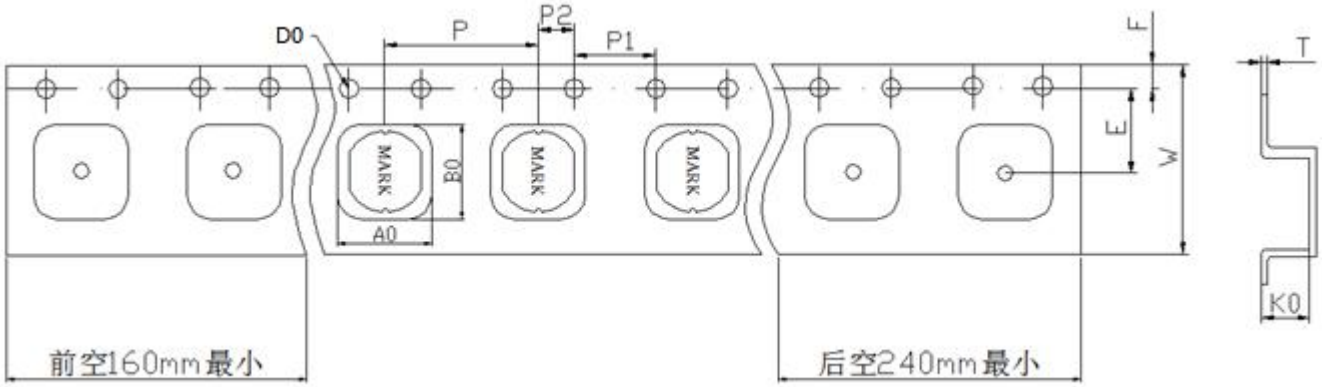


| ITEM | W | A0 | B0 | K0 | P | E | F | D0 | P1 | P2 | T |
|---|---|---|---|---|---|---|---|---|---|---|---|
| DIM | 12.00 | 5.40 | 5.90 | 4.80 | 8.00 | 5.50 | 1.75 | 1.50 | 4.00 | 2.00 | 0.40 |
| TOLE | ±0.3 | ±0.1 | ±0.1 | ±0.1 | ±0.1 | ±0.1 | ±0.1 | +0.1 | ±0.1 | ±0.1 | ±0.05 |

2）卷盘包装示意图 Tape packing diagram

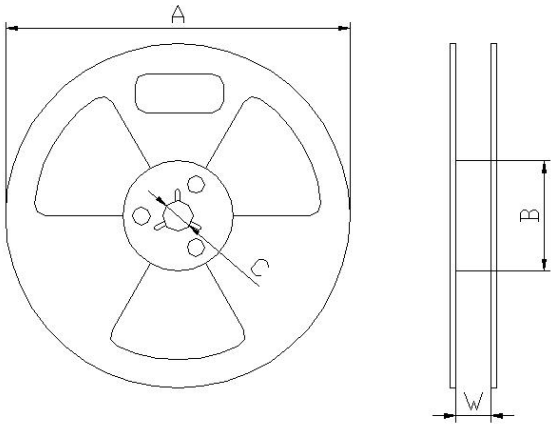


| | |
|---|---|
| A | 330±0.5 |
| B | 100±0.5 |
| C | 13.5±0.5 |
| W | 12.5±0.5 |

3）卷盘包装示意图 Tape packing diagram

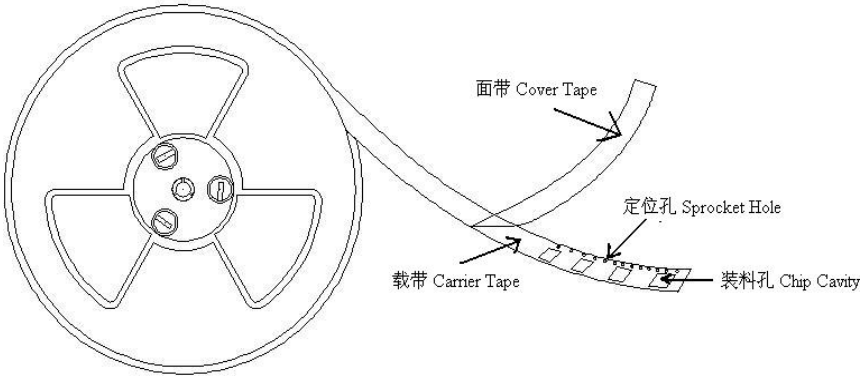

4）剥离强度要求Peeling required

①F 力大小：20～100g；

②面带剥离角度：165°～180°。

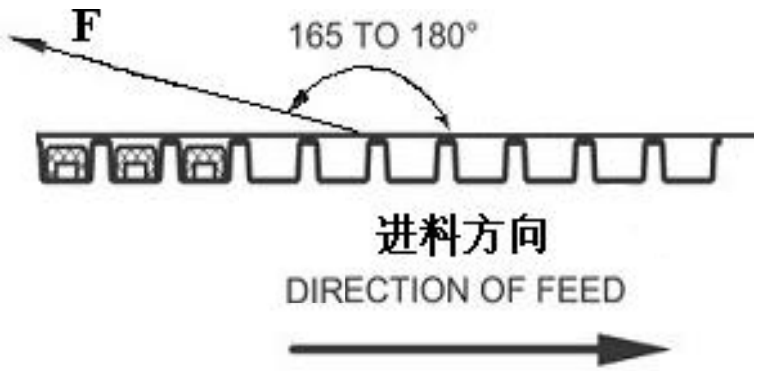


5）包装数量 Packing quantity

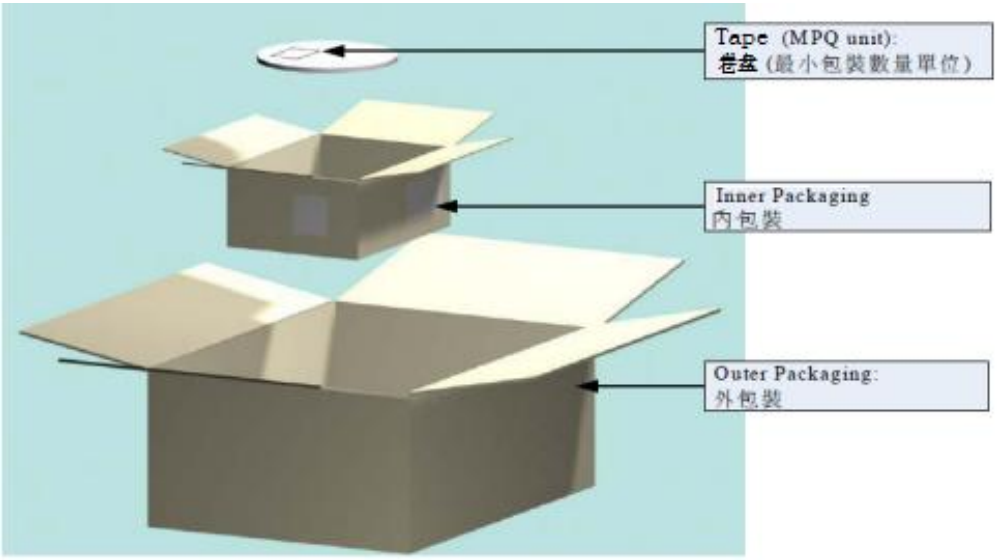


| 项目 (Project) | 数量（PCS） | 尺寸规格（Size:mm） |
|---|---|---|
| 盘(Reel) | 1500 | 13″ |
| 内盒 (Inner box) | 6000 | 340mm*340mm*65mm |
| 外箱 (Out box) | 18000 | 360mm*360mm*235mm |

## 7. RELIABILITY TEST METHOD

### MECHANICAL

| TEST ITEM | SPECIFICATION | TEST DETAILS |
|---|---|---|
| Substrate bendir | △L/Lo≦±5%<br><br>There shall be no mechanical damage or electrical damege. | The sample shall be soldered onto the printed circuit board in figure 1 and a load applied unitil the figure in the arrow direction is made approximately 3mm.(keep time 30 seconds)<br>PCB dimension shall the page 7/9<br>F(Pressurization)<br> 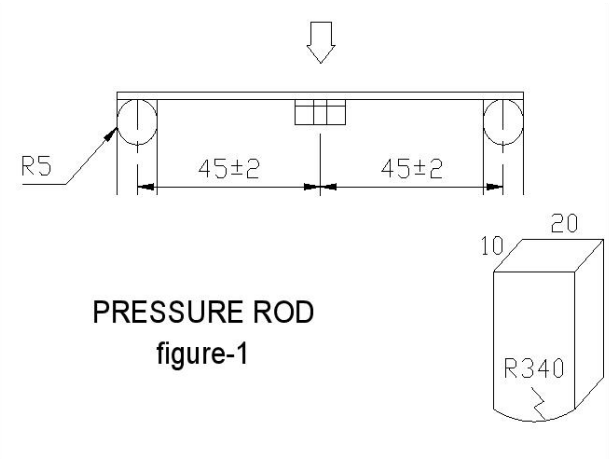 <br><br>PRESSURE ROD<br>figure-1 |
| Vibration | △L/Lo≦±5%<br><br>There shall be no mechanical damage. | The sample shall be soldered onto the printed circuit board and when a vibration having an amplitude of 1.52mm and a frequency of from 10 to 55Hz/1 minute repeated should be applied to the 3 directions (X,Y,Z) for 2 hours each.<br>(A total of 6 hours) |
| Solderability | New solder<br>More than 90% | Flux (rosin, isopropyl alcohol{JIS-K-1522}) shall be coated over the whole of the sample before hard, the sample shall then be preheated for about 2 minutes in a temperature of 130～150℃ and after it has been immersed to a depth 0.5mm below for 3±0.2 seconds fully in molten solder M705 with a temperature of 245±2℃.<br>More than 90% of the electrode sections shall be couered with new solder smoothly when the sample is taken out of the solder bath. |

## MECHANICAL

| TEST ITEM | SPECIFICATION | |
|---|---|---|
| Resistance to Soldering heat (reflow soldering) | There shall be no damage or problems. | Temperature profile of reflow soldering<br> 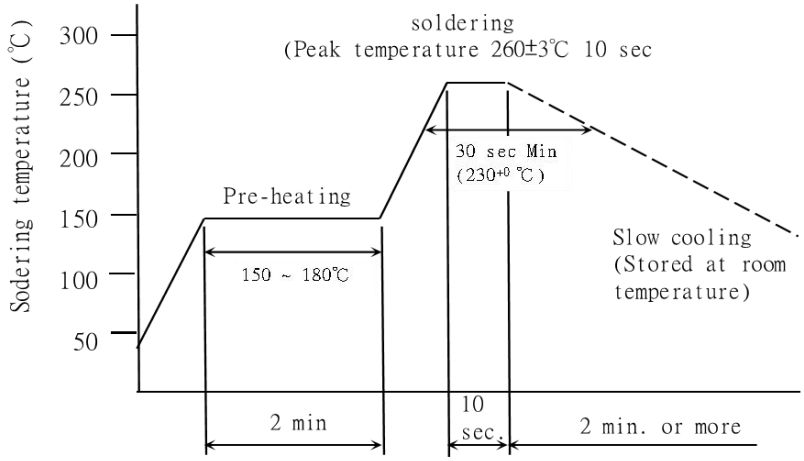 <br><br>The specimen shall be passed through the reflow oven with the condition shown in the above profile for 1 time.<br>The specimen shall be stored at standard atmospheric conditions for 1 hour, after which the measurement shall be made. |

## ELECTRICAL

| TEST ITEM | SPECIFICATION | TEST DETAILS |
|---|---|---|
| Insulation resistance | There shall be no other damage or problems. | DC 100V voltage shall be applied across this sample of top surface and the terminal.<br>The insulation resistance shall be more than $1 \times 10^8$ Ω. |
| Dielectric withstand voltage | There shall be no other damage or problems. | AC 100V voltage shall be applied for 1 minute acrosset the top surface and the terminal of this sample |
| Temperature characteristics | △L/L20℃ ≦±10%<br>0～2000 ppm/℃ | The test shall be performed after the sample has stabilized in an ambient temperature of - 40 to + 105℃ ,and the value calculated based on the value applicable in a normal temperature and narmal humidity shall be △L/L 20℃ ≦± 10%. |

# ENVIROMENT CHARACTERISTICS

| TEST ITEM | SPECIFICATION | |
|---|---|---|
| High temperature storage | △L/Lo≦±5%<br><br>There shall be no mechanical damage. | The sample shall be left for 500hours in an atmospere with a temperature of 105±2℃ and a normal humidity.<br>Upon completion of the measurement shall be made after the sample has been left in a normal temperature and normal humidity for 1 hour. |
| Low temperature storage | △L/Lo≦±5%<br><br>There shall be no mechanical damage. | The sample shall be left for 500 hours in an atmosphere with a temperature of -40±3℃.<br>Upon completion of the test, the measurement shall be made after the sample has been left in a normal temperature and normal humidity for 1 hour. |
| Change of temperature | △L/Lo≦±5%<br><br>There shall be no other dama-ge of problems | The sample shall be subject to 5 continuos cycles, such as shown in the table 2 below and then it shall be subjected to standard stmospheric conditions for 1 hour, after which measurement shall be made. |
| Moisuture storage | △L/Lo≦±5%<br><br>There shall be no mechanical damage. | The sample shall be left for 500 hours in a temperature of 40±2℃ and a humidity(RH) of 90～95%.<br>Upon completion of the test, the measurement shall be made after the sample has been left in a normal temperature and normal humidity more than 1 hour. |

table 2

| | Temperature | Duration |
|---|---|---|
| 1 | －40±3℃<br>(Themostat No.1) | 10 min. |
| 2 | Standard atmospheric | 5 sec. or less<br>No.1→No.2 |
| 3 | 105±2℃<br>(Themostat No.2) | 30 min. |
| 4 | Standard atmospheric | 5 sec. or less<br>No.2→No.1 |

Test conditions：

The sample shall be reflow soldered onto the printed circuit board in every test.

## 8、注意事项 Note

①本承认书保证我司产品作为一个单体时的质量情况。当我司产品被安装到贵司产品上时，请保证贵司的产品已根据贵司的规范进行了有效评估和确认。

This product specification guarantees the quality of our product as a single unit. Please make sure that your product is evaluated and confirmed against your specifications when our product is mounted to your product.

②如果贵司对我司产品的使用已超过了本承认书所界定的产品功能，那么对于由此引发的失效，我司将不予保证。

We cannot warrant against failure caused by any use of our product that deviates from the intended use as described in this product specification.

③为了保持终端电极的焊接性，并使包装材料保持良好状态，必须控制储存区的温度和湿度。
To maintain the solderabilty of terminal electrodes and to keep the packing material in good condition,temperature and humidity in the storage area shouid be controlled.

※建议的条件：-10～+40℃，30~70%RH。

Recommended conditions: -10～+40℃，30~70%RH.

※储存超过六个月的，应在实际使用前进行焊接检验。
In case of storage over 6 months,soldrability shall be checked before actual usage.

※即使在理想的储存条件下，产品的可焊性也随着时间的推移而降低。因此，产品应从交货时算起，建议8个月之内使用完。

Even under ideal storage conditions, the weldability of the product decreases over time. therefore, the product should be From the time of delivery, it is recommended that it be used within 8 months.

④本承认书在客户收到30 天之内，必须签章返回，逾期视为默认。

The Specification Approval should be sent back to the supplier with customer`schop on it within 30 days after receiving it, or we will take it as approved by customer`s automatically.

⑤如有特殊规格要求，请事前联络我司技术部人员。

In case of special specifications please contact our technical department prior staff.