SOREDE
索 瑞 達 電 子

深圳市索瑞达电子有限公司

承 认 书

SPECIFICATION FOR APPROVAL

客 户 名 称：
Customer Name : 标准通用

客 户 料 号：
Customer P/N:

产 品 名 称：
Product Name: 功率电感

索 瑞 达 料 号：
Sorede P/N: SNR.8065.TYD系列

制造厂商 Manufacturer	
拟 制 Draft	莫程惠
审 核 Check	笹妃团
日 期 Date	2024-09-24

深圳市索瑞达电子有限公司 工 程 专 用 章

客户承认印章 Approval Signet	
日期 Date	

地址:深圳市观澜镇福城街道新塘村8号源创园陆号A6栋3楼.

Address:3Rd Floor, Building A6, Yuanchuangyuanlu, No. 8 Xintang Village, Fucheng Street, Guanlan Town, Shenzhen.

电话 Tel: 0755-29803356 传真 Fax: 0755-29803506

电子邮件 E-mail: sorde@vip.163.com

网址 http// www.szsorede.com

修 改 履 历 表

Modify Resume

修改日期 Date modified	修 改 明 细 Modify Details	修改后版本号 Version No.
2023-04-20	文件新制订　　File formulation	A
2024-09-24	系列感量更新	A1

1、外形尺寸 Dimension ：

单位Unit：mm

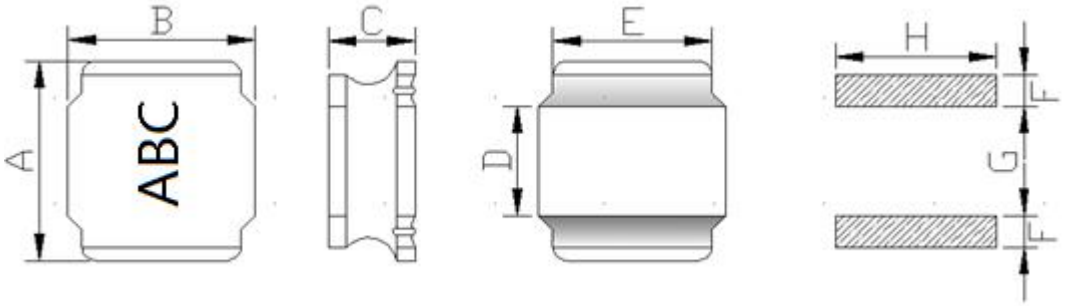

A	8.00±0.3
B	8.00±0.3
C	6.5Max.
D	3.6Ref
E	6.3Ref
F	2.5Ref
G	3.4Ref
H	7.5Ref

2、产品品名构成 Product Spec. Model

SNR . 8065 . T Y D 2R2 N T 00
a b c d e f g h i

a：系列名称Series name

b：产品尺寸Product dimensions（A x B x C）

c：形状Shape（T:12边形12-Sided、B:8边形8-Sided、S:4边形4-Sided）

d: 密封方式Sealing way (L：冷封Cold seal Y：热封Heat seal)

e: 印字方向 Lettering direction ▶

f: 电感值Inductance Value

(1R0:1.0uH; 100: 10uH; 101:100uH)

g:电感公差Inductance Tolerance (K:10% ; M:20% ; N:30%)

h: 包装Package(T:磁带/卷轴Tape/Reel、B: 散装Bulk)

i: 编号Numbering（标准standard）

▶ **Lettering direction**

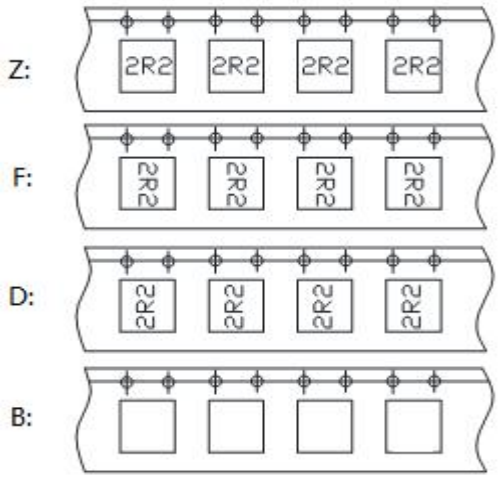

3、结构Structure

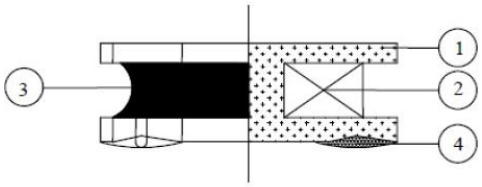

4、材料清单MATERIAL LIST

NO.	PARTS	MATERIAL SPECIFICATIONS	UL FILE NO.	TEMP. CLASS
1	CORE	N401H SDR-8.0-6.3-4.0-3.7S-P4 OR EQUIVALENT	NA	NA
2	WIRE	G1 P180 OR EQUIVALENT	E258243	180℃
3	ADHESIVE	E-500AH（胶水）+ FSC4(合金粉) OR EQUIVALENT	NA	NA
4	SOLDER	Sn99.3-Cu0.7 OR EQUIVALENT	NA	NA

*NA:NOT APPLICABLE.

5、电性能参数表 Electrical Characteristics List

规格型号 Part NO.	电感量 Tolerance(uH)	测试频率 Test Freq. (kHz/v)	直流电阻 DCR Max (Ω)	饱和电流 Isat (A)	温升电流 Irms (A)
SNR.8065.TYDR68NT00	0.68	100/1	0.012	20.0	12.0
SNR.8065.TYD1R0NT00	1.0	100/1	0.015	10.0	6.00
SNR.8065.TYD2R2NT00	2.2	100/1	0.018	10.0	5.50
SNR.8065.TYD3R3MT00	3.3	100/1	0.022	10.0	5.10
SNR.8065.TYD4R7MT00	4.7	100/1	0.025	9.00	4.70
SNR.8065.TYD5R6MT00	5.6	100/1	0.027	8.30	4.60
SNR.8065.TYD6R8MT00	6.8	100/1	0.029	7.50	4.50
SNR.8065.TYD7R8MT00	7.8	100/1	0.033	7.00	4.10
SNR.8065.TYD8R2MT00	8.2	100/1	0.039	6.50	3.80
SNR.8065.TYD100MT00	10	100/1	0.047	6.00	3.60
SNR.8065.TYD150MT00	15	100/1	0.064	5.00	3.50
SNR.8065.TYD220MT00	22	100/1	0.082	4.00	3.20
SNR.8065.TYD330MT00	33	100/1	0.110	3.40	2.50
SNR.8065.TYD470MT00	47	100/1	0.163	2.80	2.30
SNR.8065.TYD560MT00	56	100/1	0.195	2.60	1.90
SNR.8065.TYD680MT00	68	100/1	0.234	2.25	1.55
SNR.8065.TYD820MT00	82	100/1	0.260	2.10	1.45
SNR.8065.TYD101MT00	100	100/1	0.338	1.90	1.40
SNR.8065.TYD151MT00	150	100/1	0.533	1.50	1.05
SNR.8065.TYD221MT00	220	100/1	0.715	1.25	0.60
SNR.8065.TYD241MT00	240	100/1	0.741	1.20	0.58
SNR.8065.TYD331MT00	330	100/1	1.08	1.10	0.56
SNR.8065.TYD471MT00	470	100/1	1.56	0.87	0.54
SNR.8065.TYD681MT00	680	100/1	2.21	0.75	0.50
SNR.8065.TYD102MT00	1000	200/1	3.25	0.62	0.40
SNR.8065.TYD152MT00	1500	200/1	4.68	0.50	0.38
SNR.8065.TYD202MT00	2000	200/1	6.37	0.40	0.34
SNR.8065.TYD222MT00	2200	200/1	6.63	0.38	0.31

※公差Tolerance：N:±30%、M:±20%、K:±10%.

※工作温度Operating temperature rang：-40 ℃ to +125℃（Including Self-heating）

※储存温度Storage termperature rang：-40 ℃ to +125℃

额定电流：电感量比初始值下降30%Max或电感器表面温度上升≦ 40℃的电流值，以较小者为准（参考周围环境温度 25℃）。 The rated DC current is that which cause at 30%Max inductance reduction from the initial value or inductor surface temperature to rise by ≦40℃, whichever is smaller (Reference ambient temperature 25℃)。

5、电性能参数表 Electrical Characteristics List

规格型号 Part NO.	电感量 Tolerance(uH)	测试频率 Test Freq. (kHz/v)	直流电阻 DCR Max (Ω)	饱和电流 Isat (A)	温升电流 Irms (A)
SNR.8065.TYD252MT00	2500	200/1	8.190	0.35	0.28
SNR.8065.TYD302MT00	3000	200/1	10.53	0.34	0.24
SNR.8065.TYD332MT00	3300	200/1	10.80	0.30	0.22
SNR.8065.TYD472MT00	4700	200/1	15.34	0.27	0.20
SNR.8065.TYD602MT00	6000	200/1	17.81	0.25	0.18
SNR.8065.TYD682MT00	6800	200/1	23.40	0.21	0.15
SNR.8065.TYD103MT00	10000	200/1	36.40	0.17	0.11

※公差Tolerance：N:±30%、M:±20%、K:±10%.

※工作温度Operating temperature rang：-40 ℃ to +125℃（Including Self-heating）

※储存温度Storage termperature rang：-40 ℃ to +125℃

额定电流：电感量比初始值下降30%Max或电感器表面温度上升≦ 40℃的电流值，以较小者为准（参考周围环境温度 25℃）。 The rated DC current is that which cause at 30%Max inductance reduction from the initial value or inductor surface temperature to rise by ≦40℃, whichever is smaller (Reference ambient temperature 25℃)。

6、产品包装 Packaging

1）载带包装示意图 Tape packing diagram

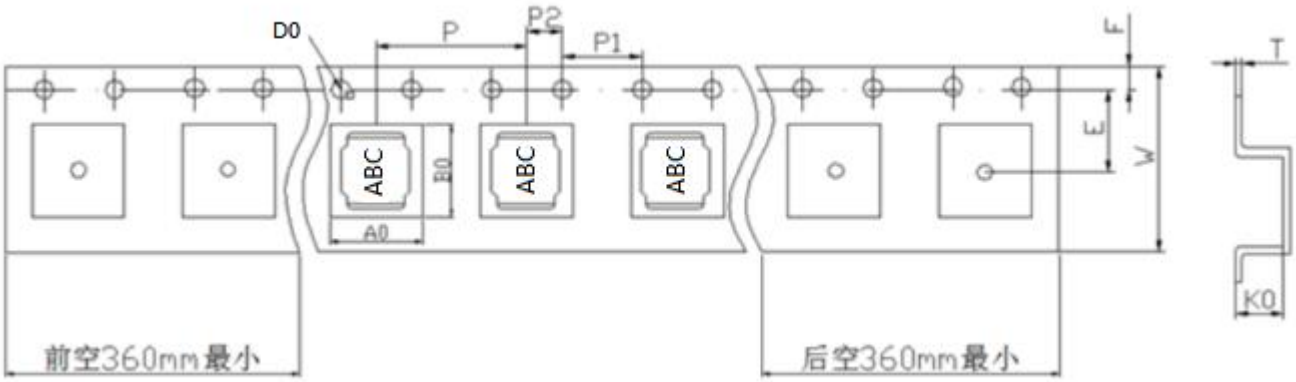

ITEM	W	A0	B0	K0	P	E	F	D0	P1	P2	T
DIM	16.00	8.4	8.4	6.7	12.00	7.5	1.75	1.50	4.00	2.00	0.35
TOLE	±0.3	±0.1	±0.1	±0.1	±0.1	±0.1	±0.1	+0.1	±0.1	±0.1	±0.05

2）卷盘包装示意图 Tape packing diagram

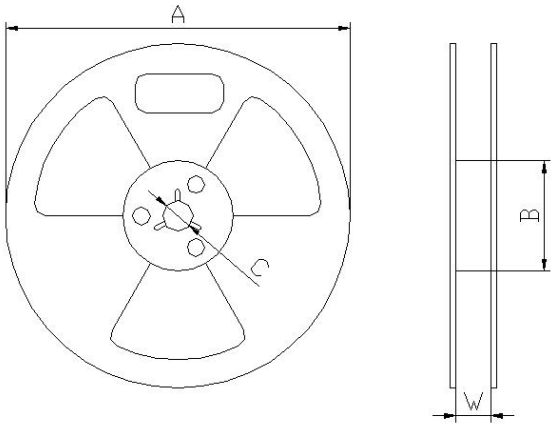

A	330±0.5
B	100±0.5
C	13.5±0.5
W	16.5±0.5

3）卷盘包装示意图 Tape packing diagram

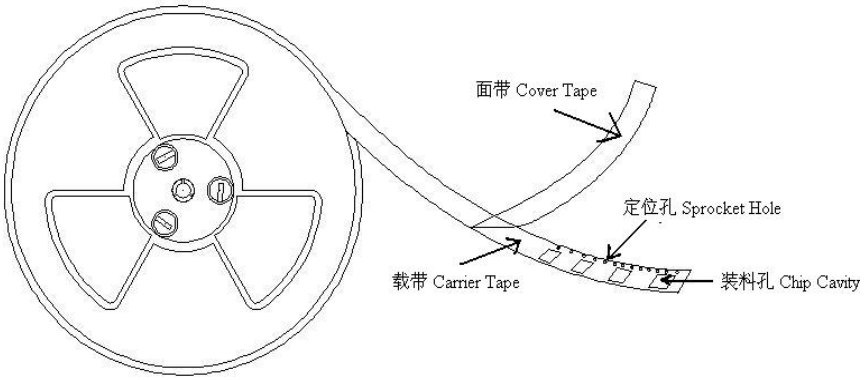

4）剥离强度要求Peeling required

①F 力大小：20～100g；

②面带剥离角度：165°～180°。

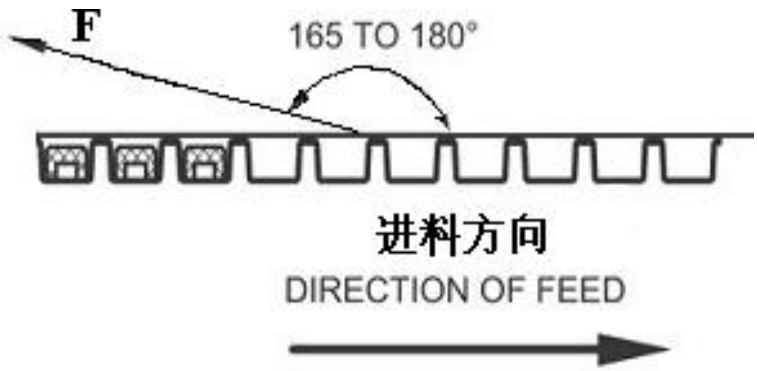

5）包装数量 Packing quantity

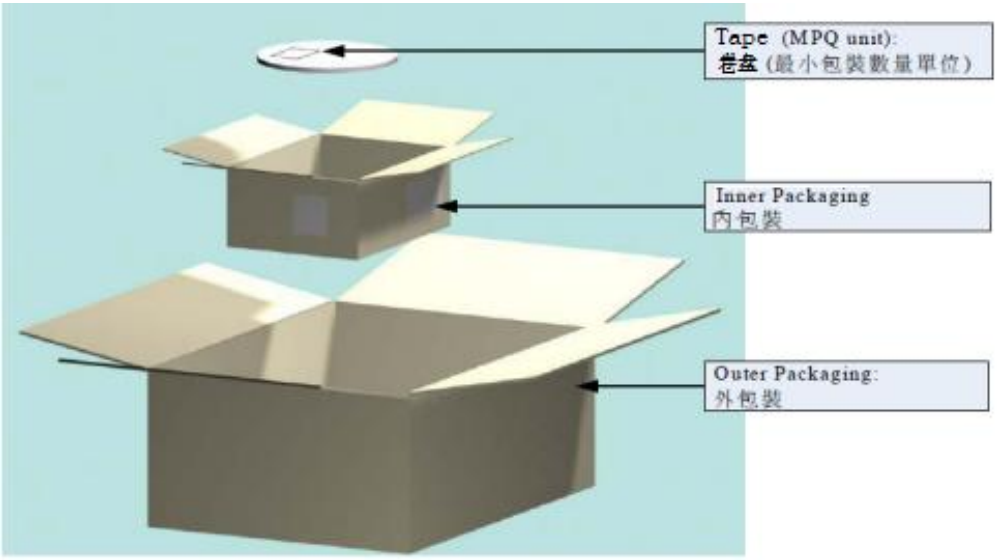

项目 (Project)	数量（PCS）	尺寸规格（Size:mm）
盘(Reel)	800	13″
内盒 (Inner box)	2400	340mm*340mm*65mm
外箱 (Out box)	7200	360mm*360mm*235mm

7. RELIABILITY TEST METHOD

MECHANICAL

TEST ITEM	SPECIFICATION	TEST DETAILS
Substrate bendir	△L/Lo≦±5% There shall be no mechanical damage or elec-trical damege.	The sample shall be soldered onto the printed circuit board in figure 1 and a load applied unitil the figure in the arrow direction is made approximately 3mm.(keep time 30 seconds) PCB dimension shall the page 7/9 F(Pressurization) 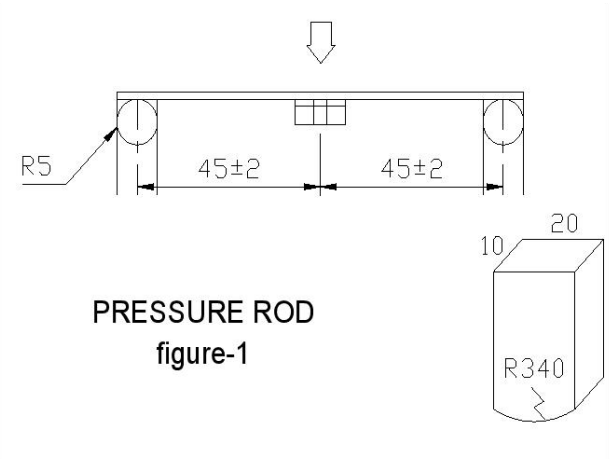 PRESSURE ROD figure-1
Vibration	△L/Lo≦±5% There shall be no mechanical damage.	The sample shall be soldered onto the printed circuit board and when a vibration having an amplitude of 1.52mm and a frequency of from 10 to 55Hz/1 minute repeated should be applied to the 3 directions (X,Y,Z) for 2 hours each. (A total of 6 hours)
Solderability	New solder More than 90%	Flux (rosin, isopropyl alcohol{JIS-K-1522}) shall be coated over the whole of the sample before hard, the sample shall then be preheated for about 2 minutes in a temperature of 130～150℃ and after it has been immersed to a depth 0.5mm below for 3±0.2 seconds fully in molten solder M705 with a temperature of 245±2℃. More than 90% of the electrode sections shall be couered with new solder smoothly when the sample is taken out of the solder bath.

MECHANICAL

TEST ITEM	SPECIFICATION	
Resistance to Soldering heat (reflow soldering)	There shall be no damage or problems.	Temperature profile of reflow soldering 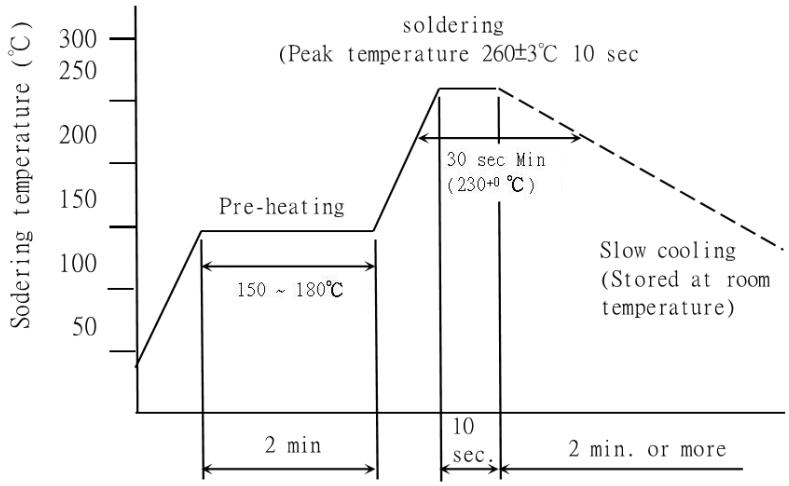 The specimen shall be passed through the reflow oven with the condition shown in the above profile for 1 time. The specimen shall be stored at standard atmospheric conditions for 1 hour, after which the measurement shall be made.

ELECTRICAL

TEST ITEM	SPECIFICATION	TEST DETAILS
Insulation resistance	There shall be no other damage or problems.	DC 100V voltage shall be applied across this sample of top surface and the terminal. The insulation resistance shall be more than 1×10^8 Ω.
Dielectric withstand voltage	There shall be no other damage or problems.	AC 100V voltage shall be applied for 1 minute acrosset the top surface and the terminal of this sample
Temperature characteristics	△L/L20℃ ≦±10% 0～2000 ppm/℃	The test shall be performed after the sample has stabilized in an ambient temperature of - 40 to + 125℃ ,and the value calculated based on the value applicable in a normal temperature and narmal humidity shall be △L/L 20℃ ≦± 10%.

ENVIROMENT CHARACTERISTICS

TEST ITEM	SPECIFICATION	
High temperature storage	△L/Lo≦±5% There shall be no mechanical damage.	The sample shall be left for 500hours in an atmospere with a temperature of 125±2℃ and a normal humidity. Upon completion of the measurement shall be made after the sample has been left in a normal temperature and normal humidity for 1 hour.
Low temperature storage	△L/Lo≦±5% There shall be no mechanical damage.	The sample shall be left for 500 hours in an atmosphere with a temperature of -40±3℃. Upon completion of the test, the measurement shall be made after the sample has been left in a normal temperature and normal humidity for 1 hour.
Change of temperature	△L/Lo≦±5% There shall be no other dama-ge of problems	The sample shall be subject to 5 continuos cycles, such as shown in the table 2 below and then it shall be subjected to standard stmospheric conditions for 1 hour, after which measurement shall be made. table 2
Moisuture storage	△L/Lo≦±5% There shall be no mechanical damage.	The sample shall be left for 500 hours in a temperature of 40±2℃ and a humidity(RH) of 90～95%. Upon completion of the test, the measurement shall be made after the sample has been left in a normal temperature and normal humidity more than 1 hour.

	Temperature	Duration
1	－40±3℃ (Themostat No.1)	10 min.
2	Standard atmospheric	5 sec. or less No.1→No.2
3	125±2℃ (Themostat No.2)	30 min.
4	Standard atmospheric	5 sec. or less No.2→No.1

Test conditions：

The sample shall be reflow soldered onto the printed circuit board in every test.

8、注意事项 Note

①本承认书保证我司产品作为一个单体时的质量情况。当我司产品被安装到贵司产品上时，请保证贵司的产品已根据贵司的规范进行了有效评估和确认。

This product specification guarantees the quality of our product as a single unit. Please make sure that your product is evaluated and confirmed against your specifications when our product is mounted to your product.

②如果贵司对我司产品的使用已超过了本承认书所界定的产品功能，那么对于由此引发的失效，我司将不予保证。

We cannot warrant against failure caused by any use of our product that deviates from the intended use as described in this product specification.

③为了保持终端电极的焊接性，并使包装材料保持良好状态，必须控制储存区的温度和湿度。
To maintain the solderabilty of terminal electrodes and to keep the packing material in good condition,temperature and humidity in the storage area shouid be controlled.

※建议的条件：-10～+40℃，30~70%RH。

Recommended conditions: -10～+40℃，30~70%RH.

※储存超过六个月的，应在实际使用前进行焊接检验。
In case of storage over 6 months,soldrability shall be checked before actual usage.

※即使在理想的储存条件下，产品的可焊性也随着时间的推移而降低。因此，产品应从交货时算起，建议8个月之内使用完。

Even under ideal storage conditions, the weldability of the product decreases over time. therefore, the product should be From the time of delivery, it is recommended that it be used within 8 months.

④本承认书在客户收到30 天之内，必须签章返回，逾期视为默认。

The Specification Approval should be sent back to the supplier with customer`schop on it within 30 days after receiving it, or we will take it as approved by customer`s automatically.

⑤如有特殊规格要求，请事前联络我司技术部人员。

In case of special specifications please contact our technical department prior staff.