REV.	ECN. NO.	APPD.
A		

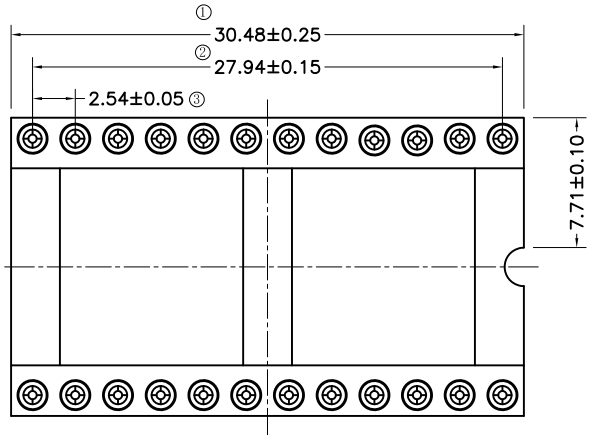

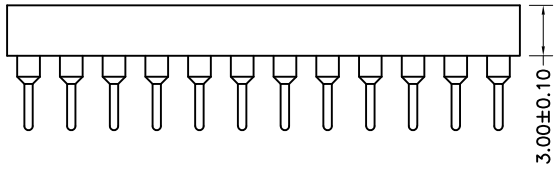

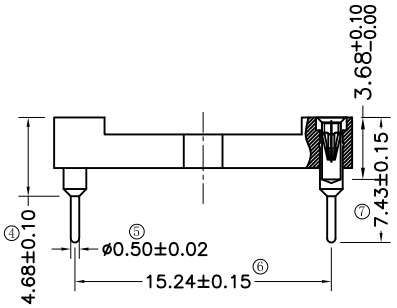

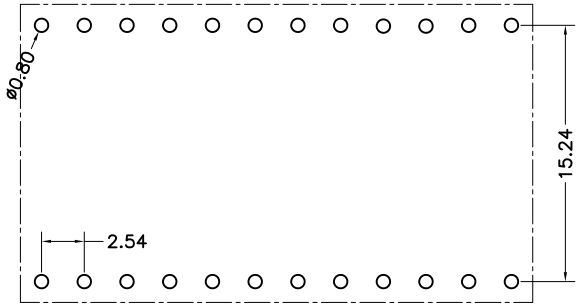

P.C.B LAYOUT

材料数据

材质:
Pin外壳:黄铜,C3604
内爪(4爪)：铍铜,C17200
电镀（外壳）:
镀锡:2μm/80μ″镍,5μm/200μ″锡
镀金:2μm/80μ″镍,0.8μ″金
电镀（内爪）:2μm/80μ″镍底,0.8μ″金
适配公针ø：0.40mm/0.60mm
阻燃等级:PBT UL94V-0

电气性能
额定电流:3Amps/contact max.
接触电阻:≤20mΩ/contact
绝缘电阻:≥1000MΩ at V=100V
工作电压:60VAC/DC

物理性能:
平均插入力 ø0.50:＜270g
平均拔出力 ø0.50:＞90g
机械寿命:min 500
工作温度范围:-40° C to+105° C
焊接温度:+200° C

MT	X	X	X	—	X	XX	XXXX
	Specifications A=Public seat B=Female seat	Pitch(mm) A=1.27 B=1.778 C=2.00 D=2.54	Dip spcing 0= No 1=1.27mm 2=2.54mm 3=7.62mm 4=10.16mm 5=15.24mm		Angel Options D=180° R=90° S=SMT I1=IC-180度 I2=IC-90度 I3=IC-SMT	No.of Positions XX positions	Pin Length Options 0743=7.43mm

X. ± 0.30	X.° ± 5°	UNITS mm	NAME(INTENDED USE)
.X ± 0.20	.X° ± 2°	MAT'L	
.XX ± 0.10	.XX° ± 1°		PART NO.(INTENDED USE)
.XXX ± 0.05	.XXX° ± 0.5°	FINISH	
FEMALE CONNNECTOR		Q'TY	

APPD: SUNNY
CHKD: LISA
DR: ZOE 2016-03-18

MINTRON CO.,LTD.

TITLE: Dual-in-line Socket 2.54mm
L=7.43mm H=3.0 P=15.24mm

DWG NO.: MTBD5-I1240743

SCALE	SHEET	REV.
1 / 1	1 / 1	A