标 记 MARK	ECN编号/变更内容 ECN NO/DEFINITION	修 改 REVISE	日 期 DATE	核 准 APPROVE

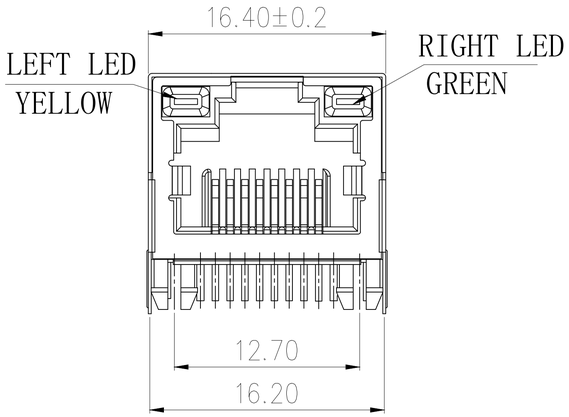

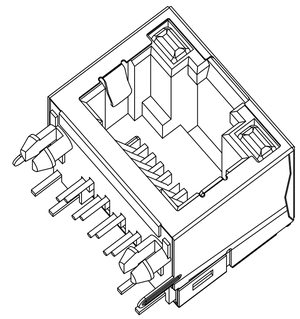

3D VIEW

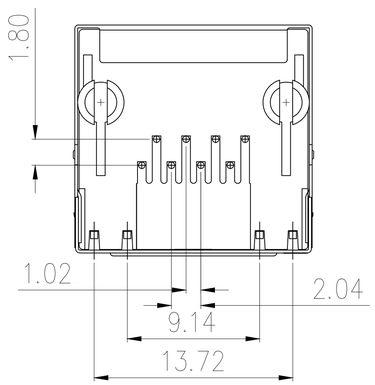

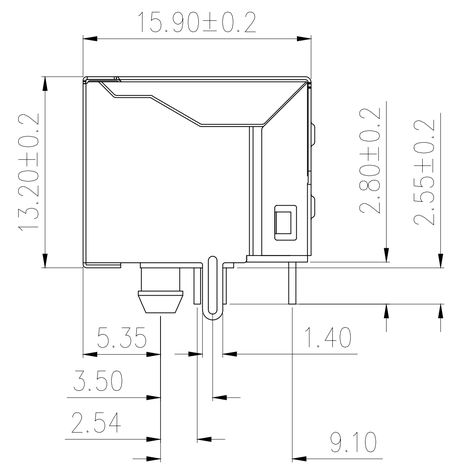

NOTES:

1. MATERIAL:
   1.1. HOUSING: PBT ,COLOR IS BLACK;
   1.2. CONTACT: PHOSPHOR BRONZE,ø0.46±0.02mm;
   1.3. SHELL: BRASS T=0.2±0.02mm;
2. FINISH:
   2.1 CONTACT: PLATED GOLD OVER NI;
   2.2 SHELL: NI OVER ALL;
3. RECINNEBDED PCB THICKNESS: 1.60mm;
4. ELECTRICAL:
   4.1. VOLTAGE RATING: 125 VAC RMS;
   4.2. CURRENT RATING: 1.5 AMP;
   4.3. CONTACT RESISTANCE: 35MILLIOHMS MAX.;
   4.4. WITHSTAND VOLTAGE: 1000 VAC RMS 50(60)Hz,1MIN.;
   4.5. INSULATION RESISTANCE: 1000MEGOHMS MIN @500V DC;
5. MECHANICAL:
   5.1. MATING/UNMATING FORCE: 25N MAX.;
   5.2. RETENTIION STRENGTH: 50N MIN.;
   5.3. OPERATING LIFE: 750 CYCLES MIN.;
6. SALT SPRAY TEST: 12H (Excluding riveted bends);
7. SOLDERABILITY: 245±5°C,5±0.5S;
8. RESISTANCE TO SOLDER: 260±5°C,10±1S;
9. ENVIRONMENTAL:
   9.1. STORAGE TEMPERATURE RANGE: -40°C~+85°C;
   9.2. OPERATION TEMPERATURE RANGE: -25°C~+70°C;
10. MATES WITH:MODULAR PLUGS THAT CONFORM TO FCC REGULATION PART 68.500;

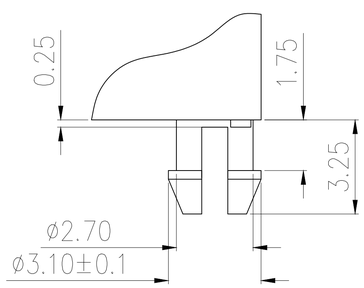

DETAIL"X"
SCALE 2:1

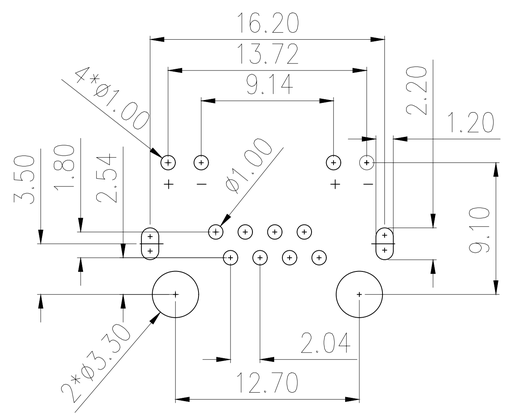

RECOMMENDER P.C.B.LAYOUT TOP VIEW
(COMPONENT SIDE TOLERANCE±0.05)

序 号	品 名	材 质	电镀/颜色	备 注
3	外壳	铜	镀镍	
2	接触	铜	镀金	
1	基座	PBT	黑色	

深圳市虹成电子有限公司		品 名 TITLE	网口	
		料 号 PART NO	HC-WK88-H16-DK	
GENERAL TOLERANCES (UNLESS SPECIFIED)	比 列 SCALE	1:1		
X.xxx ±0.10 X.xx ±0.20 X.x ±0.30 X.xx° ±1° X.x° ±3° X.° ±5°	单 位 UNIT	MM	制 图 DRAW	AhYe
	张 数 PART NO	1 OF 1	审 核 CHECKED	夏操云
	版 本 REV	A	批 准 APPROVE	赵亮亮