CND-tek
磁联达

GT2403SC

EN

100/1000M Single Port Transformer Module

1. Designed for long haul Gigabit Ethernet 1000 Base-T, full duplex applications.
2. Supports four pairs of category 5 UTP cable.
3. Cable interface for isolation and low common mode emissions
4. Compliant with IEEE 802.3af standard for 1000 Base-T Designed to support 1:1 Turns Ratio Transceivers.
5. DC Line Current : 350mA Max @ 55V.
6. Operating Temperature range: -40℃ TO +85℃
7. torage temperature range: -40℃ TO +125℃

DIMENSIONS & SCHEMATICS

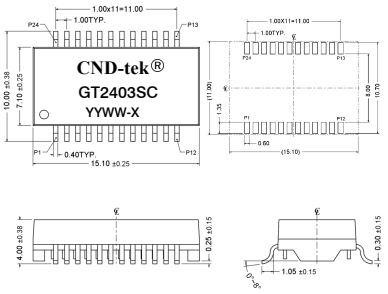

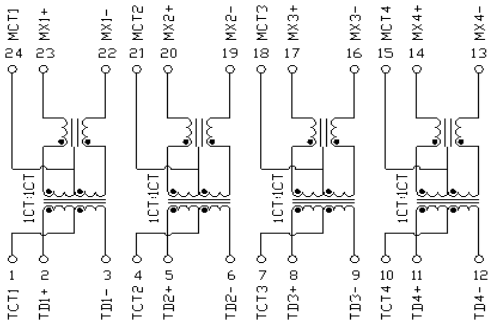

Note: 1、Dimension：mm, 2.Unless otherwise specified,tolerances are: ±0.15mm

TECHNICAL SPECIFICATIONS

OCL :	350 μH Min. @ 100 KHz, 100mV with 8mA DC Bias
Leakage	0.5 μH Max. @ 100KHz, 0.1V
Inductance: Cw/w:	28pF Max. @ 100KHz, 0.1V
DCR:	1.20 Ω Max.
Turns Ratio(±5%):	1CT:1CT(TX), 1CT:1CT(RX)
Polarity:	2-23, 5-20, 8-17, 11-14 In-Phase
Insertion Loss:	-1.0 dB Max. @ 1-100MHz
Return Loss:	-16dB Min. @ 1-30MHz -12 dB Min. @ 30-60 MHz -10 dB Min.@ 60-80 MHz
Cross Talk:	-42 dB Min.@ 1-60 MHz -35 dB Min.@ 60-100 MHz
Common Mode Rejection :	-40 dB Min.@ 1-30 MHz -35 dB Min.@ 60 MHz -30 dB Min.@ 80-100 MHz
Isolation HI-POT:	1500Vrms 1mA 1Second

PACKING SPECIFICATION

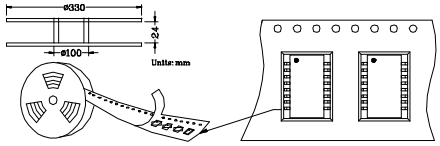

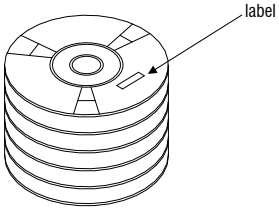

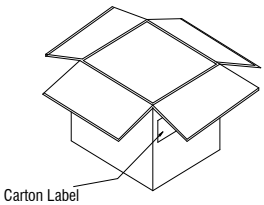

1. units/reel:850PCS
2. reel/carton:5PCS
3. units/carton :4250PCS

EXPORT CARTON:367(L)x337(W)x235(H)