REV.	DESCRIPTION	APPD.	DATE
A	INITIAL RELEASED	Chen	05/23/2025

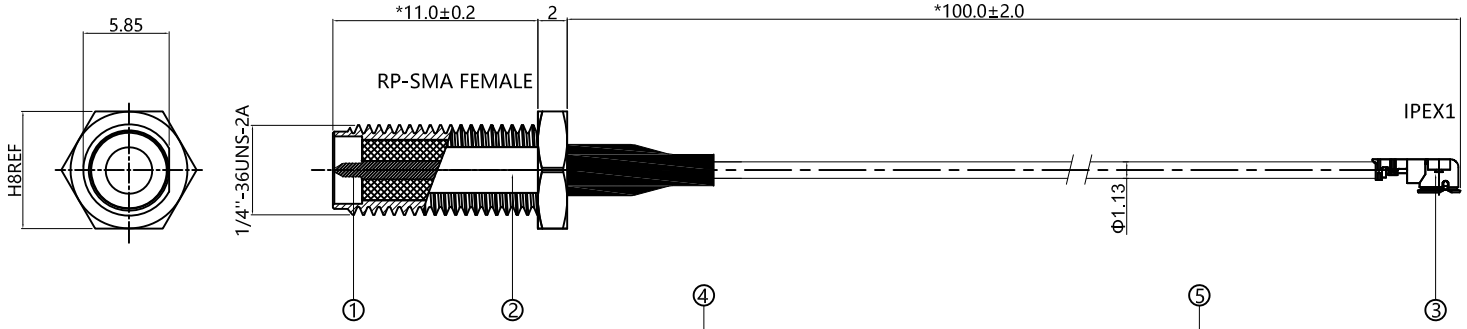

TYPICAL SPECIFICATIONS

1.0.ELECTRICAL
- 1.1.FREQUENCY RANGE: DC-6GHZ
- 1.2.NOMINAL IMPEDANCE: 50 Ohm
- 1.3.WORKING VOLTAGE:335V MAX.
- 1.4.PROOF VOLTAGE:750V
- 1.5.VSWR:1.4 MAX.

2.0.MECHANICAL
- 2.1.TORSIONAL:15IN-1BS MIN.
- 2.2.PLUGGABLE:500

3.0.ENVIRONMENTAL
- 3.1.OPERATING TEMPERATURE RANGE：-55℃ TO +125℃
- 3.2.SALT SPRAY:48HOURS
- 3.3.RoHS COMPLIANT
- 3.4.REACH COMPLIANT

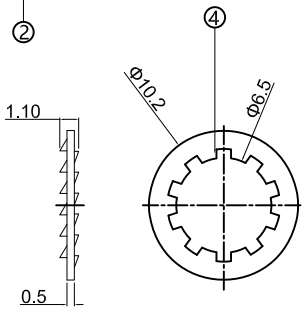

Accessory 1

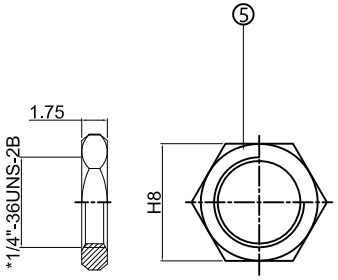

Accessory 2

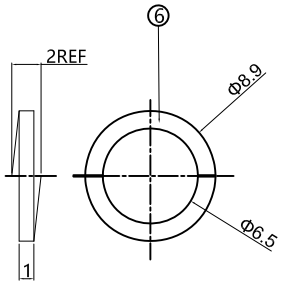

Accessory 3

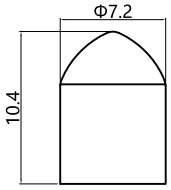

Accessory 4

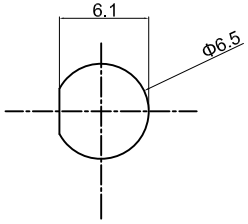

Recommended mounting hole sizes

同轴电缆技术规格		
Construction Specification / 结构尺寸		
Item/项目	Material/材料及工艺	Diameter/直径(mm)
1.Inner conductor/内导体	Tinned copper/ 镀锡铜	ϕ0.24±0.01
2.Dielectric/绝缘介质	FEP	ϕ0.68±0.02
3.Outer Conductor/外导体	Silver-Plated Copper Wire Braiding/镀银铜丝编织	ϕ0.92±0.05
4.Jacket/护套	PVC/黑色	ϕ1.13±0.05
Electrical Properties (at 20℃) /电气特性(20℃)		
项目/Item	单位/Unit	详细资料/Details
导体电阻/Conductor Resistance	Ω/km	588.85 OHM
耐压强度(AC)/Dielectric Strength(AC)	V/1 Min	1000
特性阻抗/Impedance	ohm	50±2(at 1ns@TDR)
驻波比 Standing wave ratio	/	≦1.3@0-6GHz
衰减 Attenuation	频率 Frequency	标准值 Standard vaalue 单位 Unit:dB/m
	0.5GHz	0.2288±0.10
	0.8GHz	0.2862±0.10
	1GHz	0.3160±0.10
	2GHz	0.4792±0.15
	3GHz	0.6672±0.15
	4GHz	0.8569±0.20
	5GHz	0.9360±0.20
	6GHz	1.1218±0.30

Number	Component Name	Material	Dosage
⑥	Elastic gasket	C3604 Gold plating 1u"	1
⑤	Nut	C3604 Gold plating 1u"	1
④	Shichi Huasi	C3604 Gold plating 1u"	1
③	CM1	C5210 Gold plating 1u"	1
②	Spiral tooth body	C3604 Gold plating 1u"	1
①	PIN	C3604 Gold plating 2u"	1

DIMENSIONS ARE IN MILLIMETERS

UNLESS OTHERWISE SPECIFIED TOLERANCES
ANGLES = ±3°
UP TO 6 = ±0.1
6-40 = ±0.2
40-120 = ±0.6
120-315 = ±1.0
ABOVE 315 = ±1.6

CUS P/N: Cable assembly

PART NO.: ACA-RP-SMA-K TO IPEX1 002

TITLE: Cable assembly

APPD:

DWG NO.:

CHKD:

DR:

SCALE	SHEET	REV.
1:1	1/1	V01