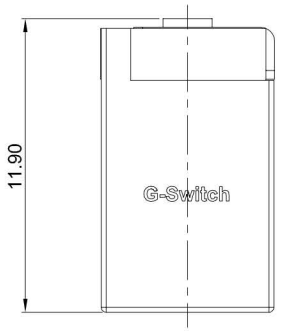

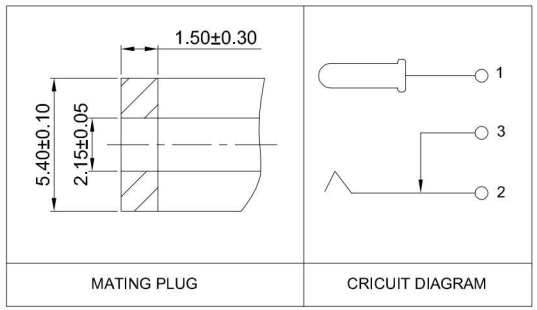

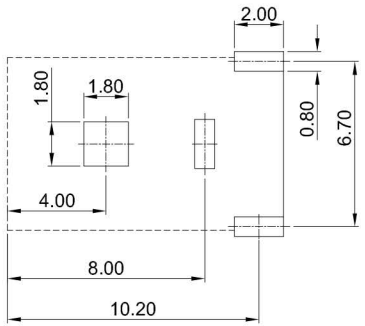

RECOMMENDED PCB LAYOUT
TOLERANCE:±0.05

DC - S 033 A - D020 - 5A

G-SWITCH

INTERFACE TYPE
S=Socket
P=Plug

PRODUCT NO

Detail

NEEDLE DIAMETER
D020=2.0mm

ELECTRIC CURRENT

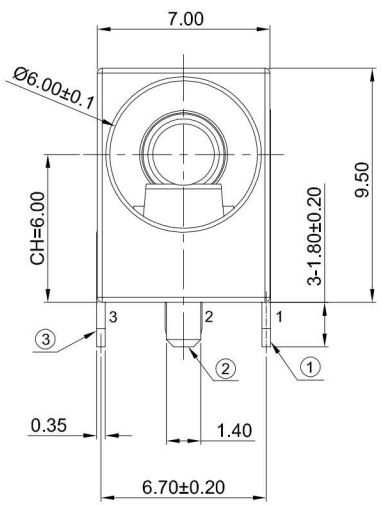

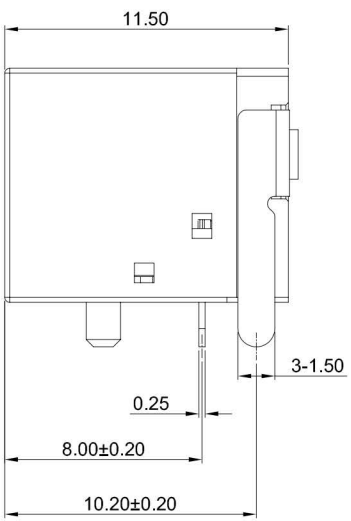

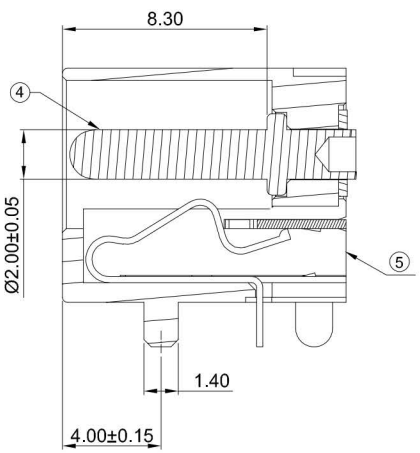

SECTION A-A

G-Switch Specification:

1.Operating temperature range: -40°C ~ +85°C
2.Rated load：5A.30V
3.Insulation resistance: 100MΩ min
4.Withstand voltage: 500V AC/min
5.Contact resistance: 30mΩ max
6.Durability cycle: 5000 Cycles
7.Insertion and extraction force: 5-30N

NO.	PART NAME	MATERIAL	REMARK
5	HOUSING	PA9T UL94V-0	BLACK
4	CENTER PIN	COPPER ALLOY	Ag PLATING
3	CONTACT3	COPPER ALLOY	Ag PLATING
2	CONTACT2	COPPER ALLOY	Ag PLATING
1	CONTACT1	COPPER ALLOY	Ag PLATING

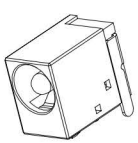

Pb Process Capable

RoHS Compliant
EU RoHS Standards

SCALE: 1:1	UNIT: mm	Title:	Horizontal DC Power Jack 5521 DIP CH=6.0 Ø2.0mm
SIZE: A4		Molde Code:	DC-S033A-D020-5A

Unless otherwise General tolerance:

X	±0.40
X.x	±0.30
X.xx	±0.20
X°	±5°
X.x°	±3°

DRAWN	CHECKED	APPROVED	DATE
Xia	Chen	Chen	2024.03.10

REV: A0 SHEET: 1/1

品赞科技 b-Switch ®
www.dg-switch.com