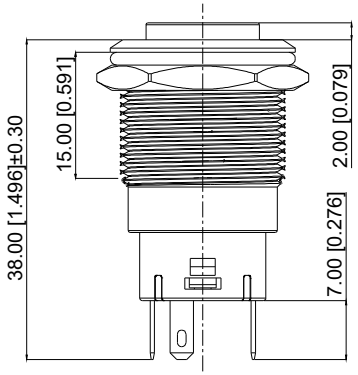

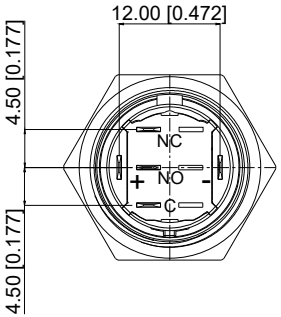

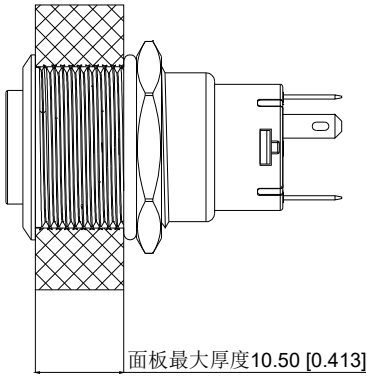

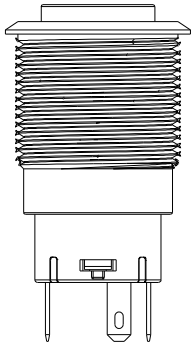

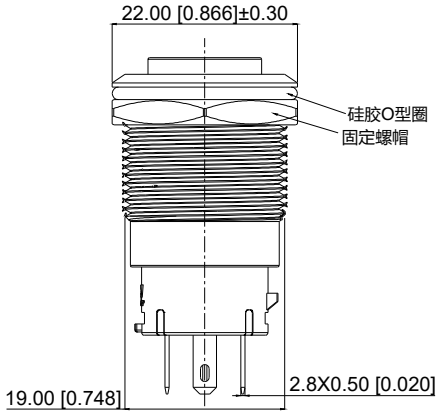

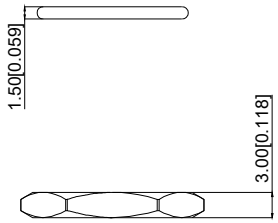

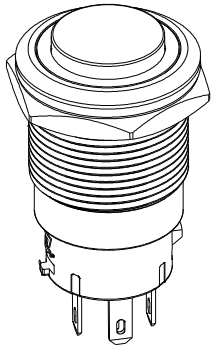

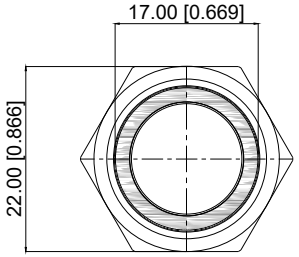

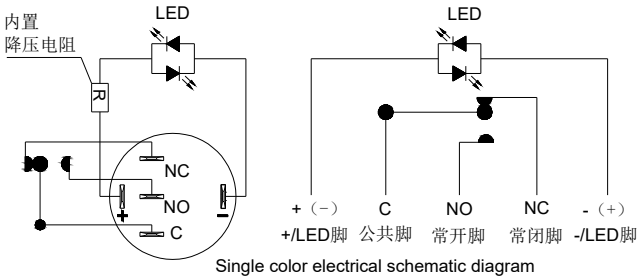

Single color electrical schematic diagram
单色电气原理图

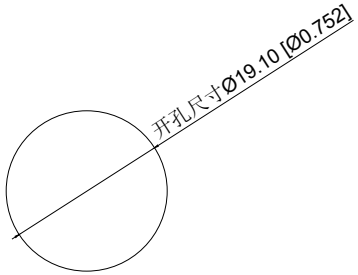

Installation View
安装视图

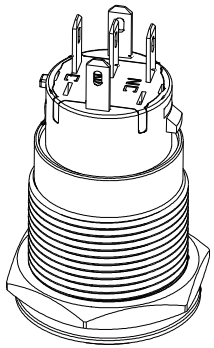

A4			
A3			
A2			
A1			
REV	DATE	REVISION DESCRIPTION	ISSUE

台普 ROCPU

COMMON TOLERANCE	
X.XX	± 0.10
X.X	± 0.15
X	± 0.25
ANGULAR	———

UNIT	MM	PROJCTED		PRODUCT NAME:
DRAWN BY	FUYUAN	CHECKED BY	COCO	MODEL NO: TP91959G124RS
DATE	2019	APPROVAL B	ALEN	Https: www.rocpu.tw

ROCPU TECHNOLONGY CO.,LTD

Copies are issued in strict confidence and shall not be reproduced or copied,or used as the basic of manufacture or sale of apparatus without permission

性能参数

1. Heating current: Ui: AC250V, Ith: 5A
   发热电流: Ui: AC250V, Ith: 5A
2. Rated current:3A/DC36V
   额定电流:3A/DC36V
3. Power-frequency withstand voltage:2000V1min
   工频耐压:2000V1min
4. Insulation resistance:≥1000MΩ
   绝缘电阻 :≥1000MΩ
5. Contact resistance:≤50mΩ
   接触电阻 :≤50mΩ
6. Pressing stroke:3.00mm ± 0.10
   按压行程:3.00mm ± 0.10
7. Contact stroke:1.50mm±0.10
   接触行程 :1.50mm±0.10
8. Nut assembly torque:5-14N
   螺帽装配力矩:5-14N
9. Protection level:IP67
   防护等级:IP67
10. Explosion prevention level：IK10
    防暴等级：IK10
11. Working environment temperature：-20 ℃~+55 ℃
    工作环境温度：-20 ℃~+55 ℃
12. Compression torque：≤ 4N
    按压扭力：≤4N
13. Electrical life：500000 cycles
    电气寿命：500000 cycles
14. mechanical：500000cycles
    机械寿命：500000cycles
15. Operation method:Self-locking
    操作方式：自锁式
16. NO reverse thrust foot torque：≤30N
    NO反推脚扭力：≤30N
17. LED lamp power consumption：20m以下
    LED灯功耗：20m以下
18. LED lamp lifespan：40000h
    LED寿命：40000h
19. LED color: Red
    LED颜色：红色

连接形式

1. Welding temperature of wire: 320 ± 20 ℃
   线材焊接温度：320±20℃
   Wire welding duration: less than 3 seconds
   线材焊接时长：时长3秒以下
2. Can be used with dedicated connectors:
   可配专用接插件使用：

2.1 Switch function wire: green (C) blue wire (NO) yellow wire (NC)
开关功能线材：绿色(C) 蓝线（NO） 黄线（NC）

2.2 LED functional wire: red wire positive pole, black wire negative pole, LED without distinction between positive and negative poles
LED功能线材：红线正极，黑线负极，LED不分正负极

A4			
A3			
A2			
A1			
REV	DATE	REVISION DESCRIPTION	ISSUE

台普 ROCPU

COMMON TOLERANCE	
X.XX	± 0.10
X.X	± 0.15
X	± 0.25
ANGULAR	———

UNIT	MM	PROJCTED		PRODUCT NAME:
DRAWN BY	FUYUAN	CHECKED BY	COCO	MODEL NO: TP91959G124RS
DATE	2019	APPROVAL B	ALEN	Https: www.rocpu.tw

ROCPU TECHNOLONGY CO.,LTD

Copies are issued in strict confidence and shall not be reproduced or copied,or used as the basic of manufacture or sale of apparatus without permission

材质参数

NO 序号	Part name 部件名	Material 材料	QTY 数量	Remark 备注
10	luminous zone 发光区	PC 塑料	1	
9	LEDpin LED脚	Brass 黄铜	1	Silvering 镀银
8	Base 底座	PA46	1	
7	Pin 引脚	Brass 黄铜	1	gold-plating 镀金
6	Contact material 接触材质	silver alloy 银合金	1	Silvering 镀银
5	LED Base LED基座	PC 塑料	1	
4	Arm nut 固定螺帽	Brass 黄铜	1	nickeling 镀镍
3	Oring O型圈	Silica gel 硅胶	1	
2	Housing 外壳	SUS 不锈钢	1	
1	Key 按键	SUS 不锈钢	1	

REV	DATE	REVISION DESCRIPTION	ISSUE
A4			
A3			
A2			
A1			

台普 ROCPU

COMMON TOLERANCE	
X.XX	± 0.10
X.X	± 0.15
X	± 0.25
ANGULAR	———

UNIT	MM	PROJCTED		PRODUCT NAME:
DRAWN BY	FUYUAN	CHECKED BY	COCO	MODEL NO: TP91959G124RS
DATE	2019	APPROVAL B	ALEN	Https: www.rocpu.tw

ROCPU TECHNOLONGY CO.,LTD

Copies are issued in strict confidence and shall not be reproduced or copied,or used as the basic of manufacture or sale of apparatus without permission