RoHS

REVISIONS					
REV.	ECN NO.	LOCATION	DESCRIPTION	DATE	DESIGN
A0	N/A		INITIAL RELEASE	2024.10.28	

Specifications(规格):

1.Impedance(特性阻抗）：50Ω;
2.Frequency（工作频率）：DC～6GHz;
3.VSWR （电压驻波比）：1.50@3GHz；1.60@6GHz;
4.Insulation resistance(绝缘阻抗）：≥100MΩ;
5.Dielectric withstand voltage（介质耐电压）：800V AC;
6.Mating cycles（耐久性）：≥25 cycles;
7.Engagement force(啮合力）：≤ 50N;
8.Retention force latch(保持力）：≥110N;
9.Temperature range(使用温度):
-40℃～+105℃;

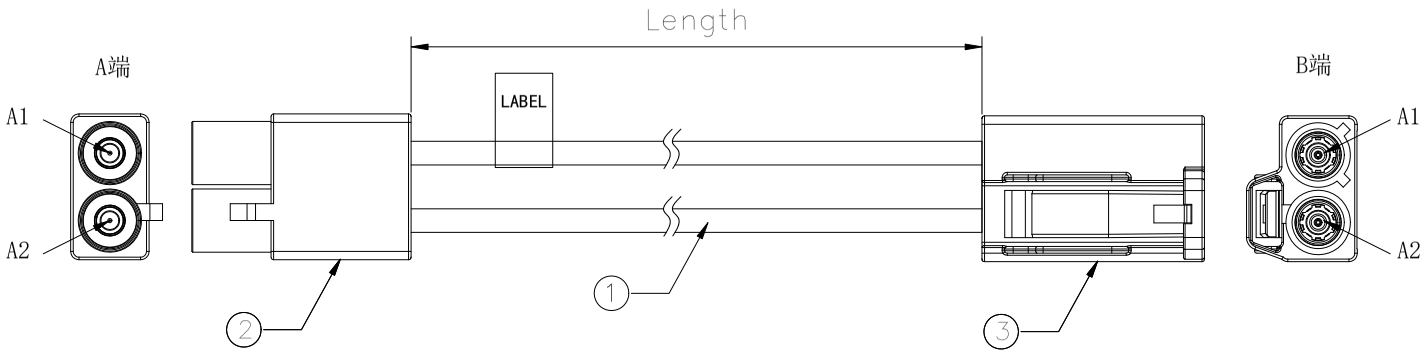

PART NO.:

XZ X X -K2M- XXXX -K2F- X X
① ② ③ ④ ⑤

① Cable TYPE:
3: RG174
4: 1.5DS
6: RG58
7: Dacar302
8: RG174LL
9: RG58LL

② Successive number: 1~Z

③ Length (mm): 1000=1000mm

④ Coding A: A~Z

⑤ Coding B: A~Z

接 点 表(Wiring Table)

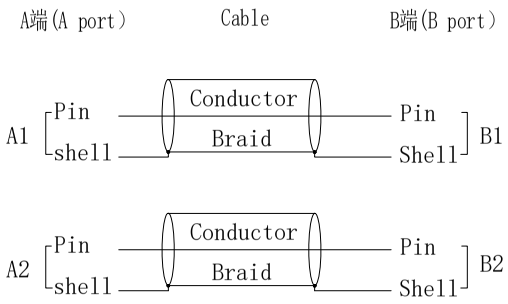

PART NO.	Length (mm/inch)	TOLERANCES (mm/inch)
XZ81-K2M-500-K2F-ZZ	500 [19.685]	±10 [0.394]
XZ81-K2M-1000-K2F-ZZ	1000 [39.370]	±15 [0.591]
XZ81-K2M-1500-K2F-ZZ	1500 [59.055]	±15 [0.591]
XZ81-K2M-2000-K2F-ZZ	2000 [78.740]	±20 [0.787]

NO.	NAME	SPEC.	Q'TY	NOTE
3	Connector	Double FAKRA Female connector,Z Code	1SET	
2	Connector	Double FAKRA Male connector,Z Code	1SET	
1	Cable	RG174LL Cable PVC OD2.80mm Black,-40~105℃	2PCS	

www.helloxkb.com www.helloxkb.cn www.xk-dg.cn

XKB 星坤 Connection

XKB INDUSTRIAL PRECISION CO.,LIMITED

DESIGN	希 文	VIEW:	MODEL TYPE: Assembly cable,Double FAKRA series
CHECKED		UNIT: mm/in	PART NO.: XZ81-K2M-XXXX-K2F-ZZ
APPROVED		SIZE: A4	DWG NO.: X-XZ81-K2M-XXXX-K2F-ZZ

SCALE	PAGE	REVISION
N/A	1/1	A0