Kinghelm®

REVISIONS					
REV	NUMBER	DESCRIPTION	DWN	CHK	DATE
A		DESIGN	James		

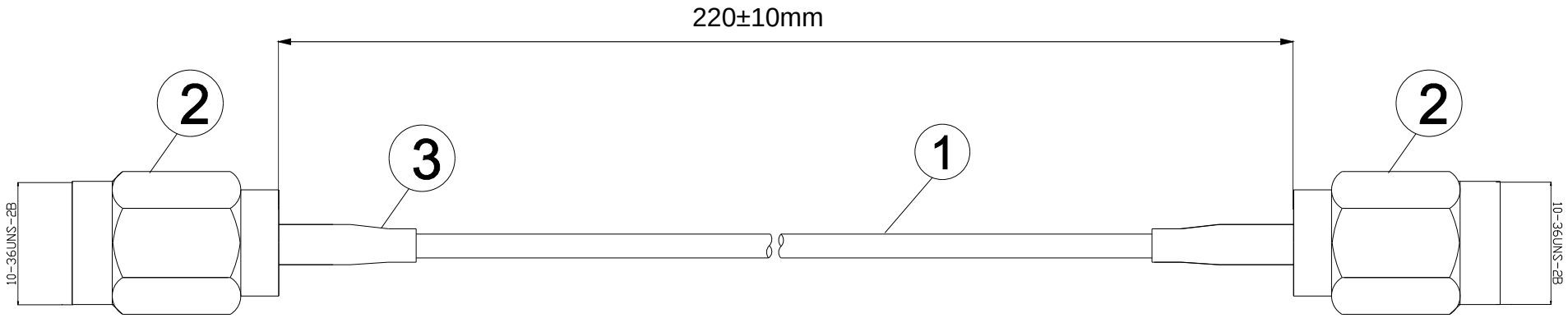

ITEM NO.	PART NUMBER	DESCRIPITION	QTY.
③	套管	OD:2.5*1.5mm热缩套管 黑色	2
②	接头	SSMA公头公针(内针),直头镀金	2
①	同轴线	RG178棕色线,OD1.8mm	AS

NOTES:

1. ELECTRICAL:
1.1. VOLTAGE RATING:DCV 300V 10MS
1.2. CONDUCTANCE RESISTANCE: 3.0 OHM/MAX.
1.3. INSULATION RESISTANCE: 5.0M OHM/MIN.
1.4. THE CABLE SHOULD BE 100% ELECTRICAL TEST
1.5. IT SHOULD BE NO ANY OPEN/SHORT, MISWIRING AND INTERMITTENT FAILURES.
2. MATERIAL:
2.1. SEE TABLE
3. ALL COMPONENTS ARE RoHS COMPLIANT.

CUSTOMER P/N:

深圳市金航标电子有限公司
SHENZHEN KINGHELM ELECTRON CO.,LTD.

WWW.KINGHELM.COM.CN
0755-28190160

ALL DIMENSION ARE IN MM

COMPUTER GENERATED IN SOLIDWORKS
DO NOT SCALE THIS DRAWING

		DATE
DRAWN	James	2025-3-26
CHKD.	Frank	2025-3-26
APPD.	Scott	2025-3-26

TITLE
KH-SSMAJ-SSMAJ-RG178-220MM

PROJECTION

GENERAL TOLERANCE FOR

ANGLES	X.X	X.XX	X.XXX
±1°	±0.3	±0.25	±0.150

SIZE B | DWG Number. | REV A

SCALE: Free | TYPE | SHEET 1 OF 1