© – TE Connectivity. All Rights Reserved.

REVISIONS					
P	LTR	DESCRIPTION	DATE	DWN	APVD
	B	REVISED PER ECO-19-009164	24JUN2020	KG	DR

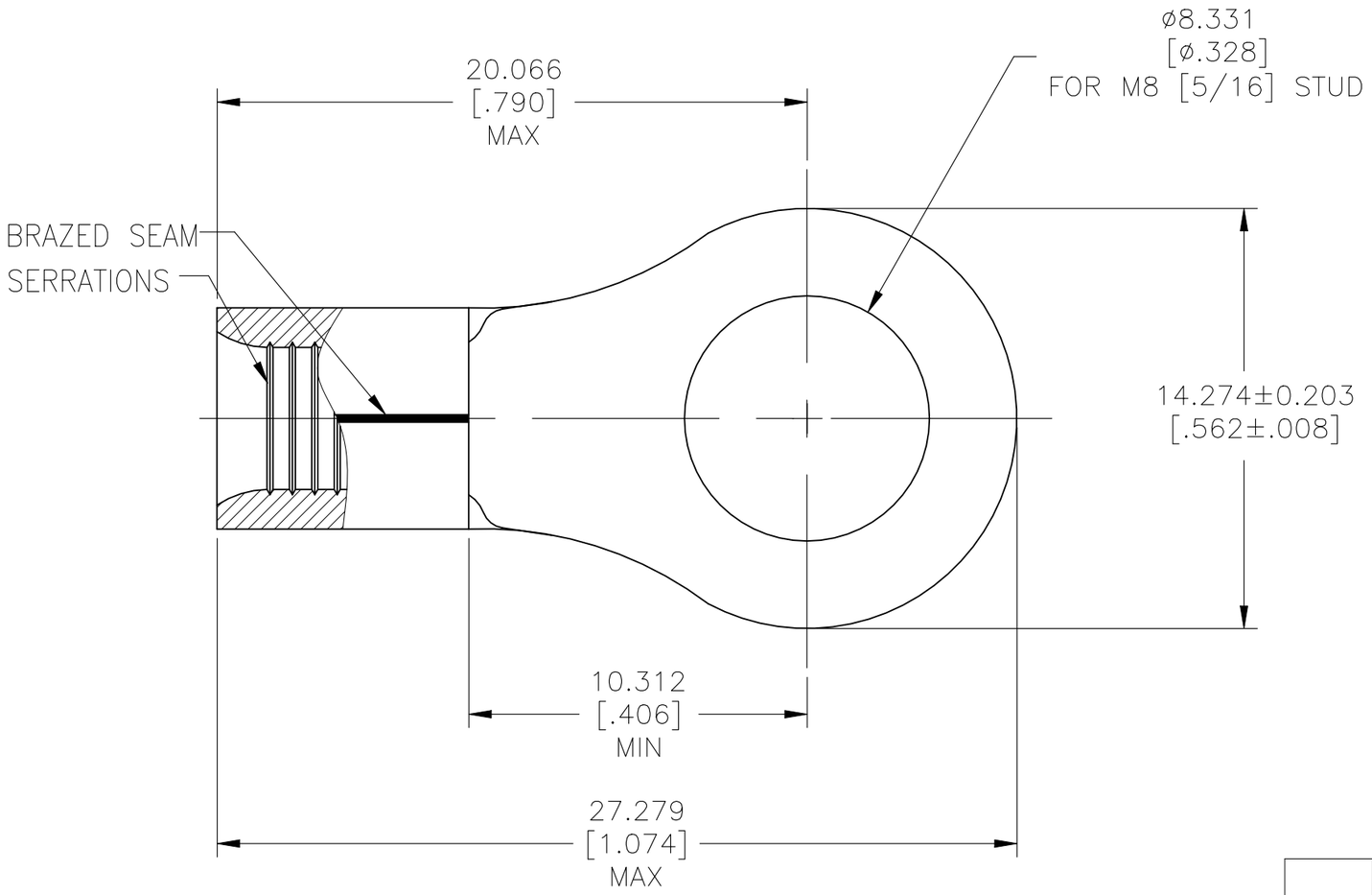

1 WIRE RANGE IS FOR 8 AWG. STANDARD WIRE CROSS SECTIONAL AREA RANGE: 20,800–33,100 CMA, STRANDED WIRE

2 TERMINAL BODY MATERIAL THK IS 1.219±0.076[.048±.003]

3 RECOMMENDED OPERATING TEMP –55°C [131°F] TO +200°C [392°F] FOR HEAT SHRINK TUBING

4 HEAT SHRINK TUBING SHELF LIFE OF 18 MONTHS FROM DATE CODE ON LABEL

5 TERMINAL BODY PRODUCT SPECIFICATION 108–32046
APPLICATION SPECIFICATION 114–2162

–1	PART NO	DESCRIPTION
1	8–1190141–0	HIGH AND LOW TEMPERATURE CROSS LINKED FLUOROPOLYMER HEAT SHRINK TUBING 9.53 [.375]MIN ID X 25.400±2.032 [1.000±.080] RT555–3/8–0–SP
1	323167	TERMINAL BODY: COPPER PER ASTM B152 ANNEALED FINISH: NICKEL PLATE 0.00762[.000300] MIN EXT THK PER SAE AMS QQ–N–290

THIS DRAWING IS A CONTROLLED DOCUMENT.

DIMENSIONS: mm [INCHES]

TOLERANCES UNLESS OTHERWISE SPECIFIED:

0 PLC	± –
1 PLC	± –
2 PLC	± –
3 PLC	± 0.127[.005]
4 PLC	± –
ANGLES	± 1°

MATERIAL: SEE TABLE

FINISH: SEE TABLE

DWN JR RUTH 08DEC09
CHK TOM MICHIELUTTI 08DEC09
APVD TOM MICHIELUTTI 08DEC09
PRODUCT SPEC – 5
APPLICATION SPEC – 5
WEIGHT –

TE Connectivity

NAME
–
HEAT RESISTANT TERMINAL KIT
WIRE SIZE: 8 AWG

SIZE	CAGE CODE	DRAWING NO	RESTRICTED TO
A3	00779	C–696635	–

CUSTOMER DRAWING

SCALE 5:1 SHEET 1 OF 1 REV B