PART NUMBER and LEGEND	LED COLOR			A
	POSITION 1	POSITION 2	POSITION 3	
564-0700-100F	RED / GREEN	** BLANK **	** BLANK **	.109 ±.015
564-0700-101F	RED / GREEN	** BLANK **	RED / GREEN	.109 ±.015
564-0700-110F	RED / GREEN	RED / GREEN	** BLANK **	.109 ±.015
564-0700-111F	RED / GREEN	RED / GREEN	RED / GREEN	.109 ±.015
564-0700-141F	RED / GREEN	YELLOW / GREEN	RED / GREEN	.109 ±.015
564-0700-144F	RED / GREEN	YELLOW / GREEN	YELLOW / GREEN	.109 ±.015
564-0700-404F	YELLOW / GREEN	** BLANK **	YELLOW / GREEN	.109 ±.015
564-0700-414F	YELLOW / GREEN	RED / GREEN	YELLOW / GREEN	.109 ±.015
564-0700-440F	YELLOW / GREEN	YELLOW / GREEN	** BLANK **	.103 ±.015
564-0700-441F	YELLOW / GREEN	YELLOW / GREEN	RED / GREEN	.109 ±.015
564-0700-444F	YELLOW / GREEN	YELLOW / GREEN	YELLOW / GREEN	.103 ±.015

REV	ECN NO	REVISIONS	DRN	CKD	APP	DATE
A	—	NEW RELEASE	SM	TWC	MES	8-15-06
B	—	ADDED 564-0700-404F	RSK	WFB	NO	2-12-15
C	—	UPDATED LED SPECS	VP	WFB	NO	6-9-15

NOTES:

1- LEADS TO FIT INTO HOLES SPACED AS PER HOLE PATTERN
2- LEADS TO BE FREE OF DEFORMATION AFTER BENDING AND CUTTING
3- LED LEAD DIMENSIONS SHOWN ARE MEASURED AT HOUSING EXIT.
4- WHEN A ZERO APPEARS IN THE LAST 3 DIGITS OF THE PART NUMBER THIS MEANS NO LAMP REQUIRED IN THAT POSITION
5- PIN NUMBERS FOR REFERENCE ONLY, DESIGNATION NON-EXISTENT ON PARTS
6- DIALIGHT PART NUMBER: 564-0700-XXXF
7- THIS ASSEMBLY CONTAINS ELECTROSTATIC DISCHARGE SENSITIVE DEVICES (ESDS). MAINTAIN ALL PRECAUTIONARY MEASURES DURING ASSEMBLY, HANDLING AND STORAGE IN ACCORDANCE WITH IPC-A-610.

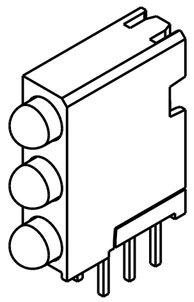

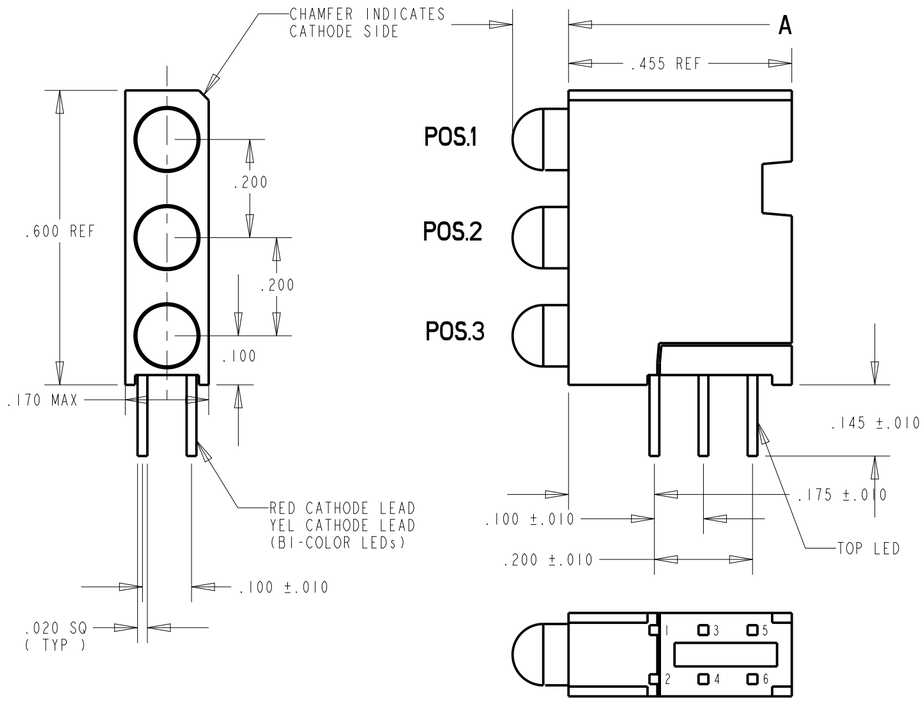

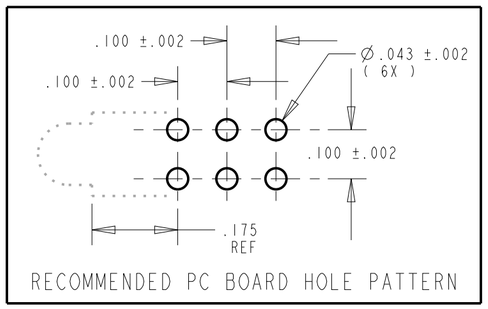

ATTENTION:
OBSERVE PRECAUTIONS FOR HANDLING ELECTROSTATIC SENSITIVE DEVICES

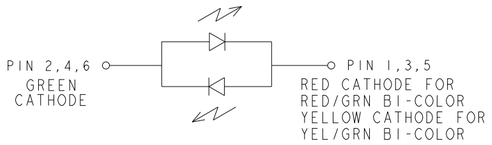

OPERATING CHARACTERISTICS AT 25°C AMBIENT												
LED COLOR	PEAK WAVELENGTH (nm)	DOMINANT WAVELENGTH (nm)			LUMINOUS INTENSITY (mcd) @ I_F=10mA			FORWARD VOLTAGE (V) @ I_F=20mA			REVERSE CURRENT (μA)	VIEWING ANGLE (DEGREES)
	TYP	MIN	TYP	MAX	MIN	TYP	MAX	MIN	TYP	MAX	MAX	TYP
RED	630	617	621	633	1.2	5.6	30	2.0	2.0	2.6	100	200
GREEN	565	564	569	573	1.5	8.7	30	2.1	2.1	2.6	100	200
YELLOW	585	583	588	593	3.0	—	8.5	—	2.1	2.6	100	80
GREEN	565	564	569	574	6.5	—	18.0	—	2.1	2.6	100	80

ABSOLUTE MAXIMUM RATINGS AT 25°C AMBIENT	VALUE	VALUE	UNITS
	RED|GREEN	YELLOW|GREEN	
POWER DISSIPATION	100	60|100	mW
PEAK FORWARD CURRENT (1/10 DUTY CYCLE, 0.1ms PULSE WIDTH)	90	80|120	mA
CONTINUOUS FORWARD CURRENT	30	20|30	mA
LINEAR DERATING FROM 50°C	0.4	0.25|0.40	mA/°C
REVERSE VOLTAGE	5		V
LEAD SOLDERING TEMPERATURE (.079" [2,0mm] FROM BODY) FOR 5 SEC.	260		°C
OPERATING TEMPERATURE	-55 TO +100		°C
STORAGE TEMPERATURE	-55 TO +100		°C

RoHS Compliant 564-0700-XXXF
Part Numbers with the "F" suffix ending are RoHS Compliant.
Example: 564-0700-101F
Packaging is marked with "RoHS Compliant" label or equivalent markings.
Parts can be wave soldered, dip soldered or hand soldered using typical lead-free soldering process with max 260°C temp. for 5 sec.

THIS DRAWING AND THE CONTENTS HEREIN ARE CONFIDENTIAL AND THE SOLE PROPERTY OF DIALIGHT. REPRODUCTION OF THIS DRAWING OR CONSTRUCTION OF ANY PARTS WITHIN THIS DRAWING ARE FORBIDDEN WITHOUT THE WRITTEN CONSENT OF DIALIGHT.

SCALE: DRAWING SCALE
ALL DIM'S IN: INCHES (MM)
TOLERANCES: UNLESS OTHERWISE SPECIFIED
FRACTIONS: ±1/64
DECIMALS (.XX): ±.01
DECIMALS (.XXX): ±.005
DECIMALS (.XXXX): ±.0005
ANGLES: ±1°
FINISH:

DRAWING NUMBER: C-17424
REV: C
TITLE: STANDARD 3X1 CBI BLOCK RoHS COMPLAINT
MATERIAL:

Dialight
1501 ROUTE 34 SOUTH
FARMINGDALE, NJ 07727

FSCM 83330
SHEET 1 OF 1
FAMILY TABLE: