© – TE Connectivity. All Rights Reserved.

REVISIONS					
P	LTR	DESCRIPTION	DATE	DWN	APVD
	M1	REVISED AS PER ECN-22-178936	12OCT2022	AB	SZ

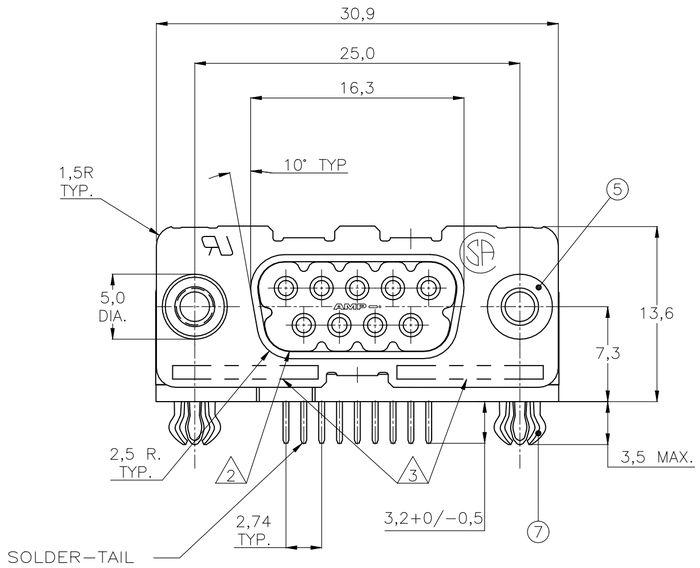

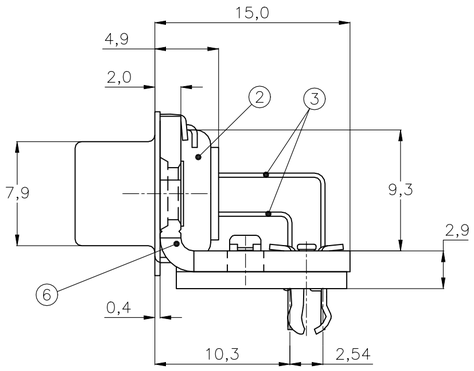

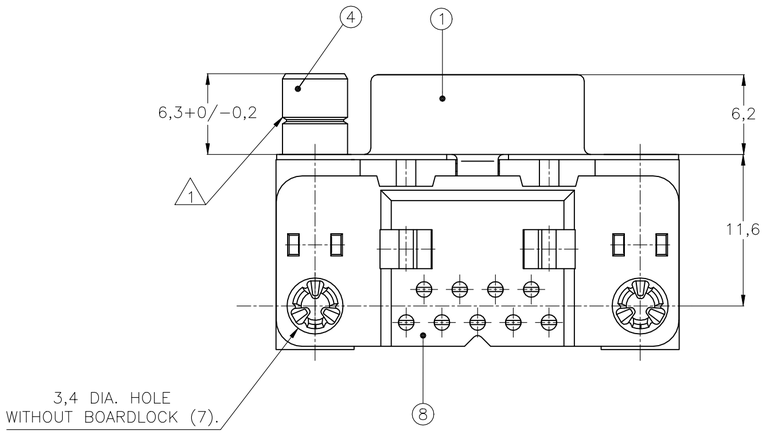

ACCESSORIES											
	5	BUSHING WITH THROUGH−HOLE 3,1 DIA.	2				2				
	5	BUSHING WITH INNER THREAD 4−40 UNC		2				2			
	5	BUSHING WITH INNER THREAD M3			2				2		
	4	FEMALE SCREWLOCK WITH 4−40 UNC				2				2	
	4	FEMALE SCREWLOCK WITH M3					2				2
	7	BOARDLOCK	2	2	2	2	2				
	ITEM NO.	DESCRIPTION OF ACCESSORY	106505−2	1−106505−2	2−106505−2	3−106505−2	4−106505−2 OBSOLETE	5−106505−2	6−106505−2	7−106505−2 OBSOLETE	8−106505−2	9−106505−2 OBSOLETE

△1 GROOVE INDICATES VERSION WITH 4−40 UNC INNER THREAD; WITHOUT GROOVE INDICATES VERSION WITH M3 INNER THREAD.

△2 CAVITY IDENTIFICATION AT FRONT SIDE ONLY.

△3 PART NUMBER AND DATE CODE.

4. AIR AND CREEPAGE DISTANCES ACCORDING TO DIN 41652.

△5 CONTACT FINISH: GOLD FLASH OVER PALLADIUM NICKEL PLATE OR GOLD PLATE ON MATING SURFACES, TIN PLATE ON THE SOLDER−TAILS, NICKEL UNDERPLATE ON THE ENTIRE CONTACT. MATING SURFACE FINISH MEETS PERFORMANCE LEVEL 2 PER DIN 41652.

ITEM NO./MATERIAL :

① SHELL	:	BRIGHT TIN PLATED STEEL
② HOUSING	:	GLASS FILLED POLYESTER, COLOR : BLACK
③ CONTACTS	:	PHOSPHOR BRONZE (PLATING : SEE NOTES ABOVE)
④ FEMALE SCREWLOCK	:	TIN PLATED STEEL (INNER THREAD 4−40 UNC OR M3)
⑤ BUSHING	:	TIN PLATED STEEL (INNER THREAD 4−40 UNC OR M3 OR 3,1 DIA THROUGH−HOLE)
⑥ BRACKET	:	TIN PLATED STEEL
⑦ BOARDLOCK	:	TIN PLATED PHOSPHOR BRONZE
⑧ POST ALIGNMENT PLATE	:	GLASS FILLED NYLON COLOR : BLACK

RECOMMENDED P.C. BOARD HOLE−LAYOUT

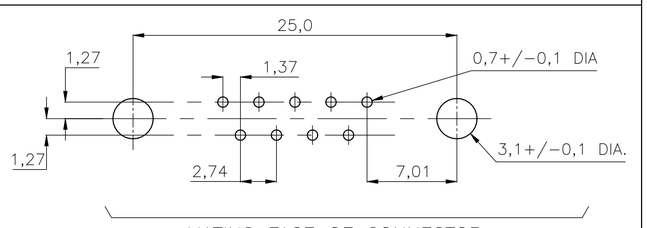

THIS DRAWING IS A CONTROLLED DOCUMENT.
DIMENSIONING AND TOLERANCING PER ASME Y14.5M−2009

DIMENSIONS: mm

TOLERANCES UNLESS OTHERWISE SPECIFIED:
0 PLC ± –
1 PLC ± 0.3
2 PLC ± 0.15
3 PLC ± –
4 PLC ± –
ANGLES ± 2°

MATERIAL –
FINISH –

DWN D. KESSLER 14JAN99
CHK W. SOOMERS –
APVD — –
PRODUCT SPEC —
APPLICATION SPEC —
WEIGHT 0.000000

TE Connectivity

NAME HD−20 SIZE 1 RIGHT ANGLE RECEPTACLE HEADER; MARK II+

SIZE	CAGE CODE	DRAWING NO	RESTRICTED TO
A2	00779	C−106505	—

CUSTOMER DRAWING | SCALE NTS | SHEET 1 OF 1 | REV M1

106505