N/C	DTS20XXX-XXPX

REVISIONS			
REV	DESCRIPTONS	DATE	APPROVED
N/C	NEW RELEASE PER E.O. H1661	10/21/96	L. Hall

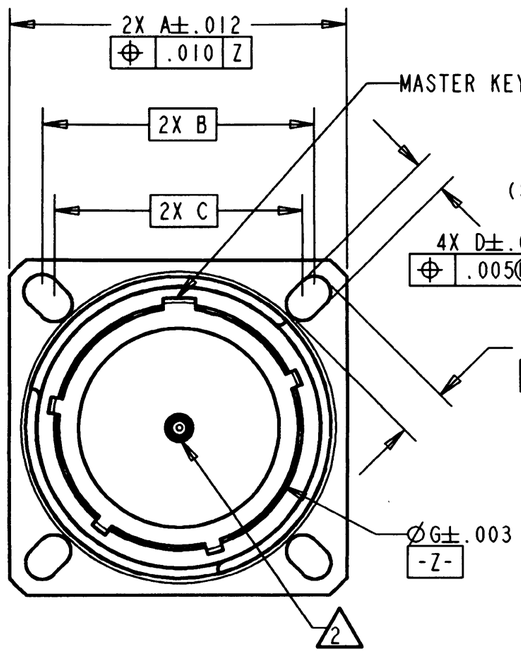

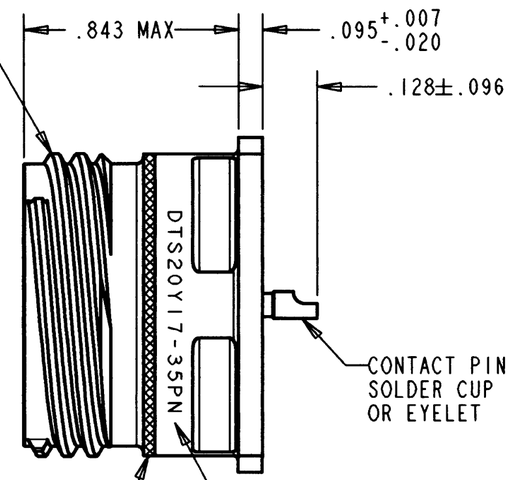

SHELL SIZE	A	B	C	D	E	F THREAD	G
9	.937	.719	.594	.128	.216	.6250	.444
11	1.032	.812	.719	.128	.194	.7500	.572
13	1.126	.906	.812	.128	.194	.8750	.684
15	1.221	.969	.906	.128	.173	1.0000	.808
17	1.311	1.062	.969	.128	.194	1.1875	.934
19	1.437	1.156	1.062	.128	.194	1.2500	1.039
21	1.563	1.250	1.156	.128	.194	1.3750	1.164
23	1.689	1.375	1.250	.154	.242	1.5000	1.289
25	1.811	1.500	1.375	.154	.242	1.6250	1.414

1. DIMENSIONS ARE IN INCHES UNLESS OTHERWISE NOTED.
2. INSERT ARRANGEMENT CONFORMS TO MIL-STD-1560.
3. THE INSERT ARRANGEMENT DOSE NOT ROTATE WITH MASTER KEYWAY.
4. FINISH: SHELL - ELECTRO-POLISH
   PIN CONTACTS - GOLD OVER NICKEL
5. MATERIAL: SHELL - STAINLESS STEEL
   PIN CONTACTS - HIGH NICKEL IRON ALLOY OR EQUIVALENT
   GLASS - COMPRESSION GLASS
   PIN INSERT & INTERNAL SEAL - FLUOROSILICONE ELASTOMER
6. MATES WITH DTS26***-**S* PLUG CONNECTOR.
7. CONNECTOR MEETS REQUIREMENTS OF MIL-C-38999 SERIES III.
8. CONSULT SALE STAFF FOR ARRANGEMENT AVAILABILITY.
9. MOUNTING INFORMATION: DIMENSION "B" FRONT OR REAR PANEL MOUNT
   DIMENSION "C" FRONT PANEL MOUNT ONLY

NOTE:

10. PART NUMBER BREAKDOWN: DTS 20 Y 17-35 P N

- SHELL KEYING POSITIONS: N,A,B,C,D OR E
- CONTACT PIN STYLE: P = SOLDERCUP, X = EYELET
- INSERT ARRANGEMENT
- SHELL SIZE: 9,11,13,15,17,19,21,23, OR 25
- CLASS: N = NICKEL PLATE OVER STAINLESS STEEL
  Y = ELECTROL POLISHED STAINLESS STEEL
- SHELL MOUNTING STYLE: 20 = BOX FLANGE MOUNT
- BASIC IDENTIFER: 38999 SERIES III HERMETIC RECEPTACLE

FILE:DTS20XXX-XXPX-ENV

	SIGNATURE & DATE
DR	S.LUI 10/21/96
CHK	L. Hall 10/21/96
PE	10/21/96
APPD	10/21/96
SCALE: NONE	

CONNECTOR, RECEPTACLE
HERMETIC
PIN UNIT
BOX FLANGE MOUNT
THREAD COUPLING
MIL-C-38999 SERIES III
ENVELOPE

CP | MATL CODE 72

DEUTSCH
HERMETIC PRODUCTS OPERATION
680 Airport Road
Oceanside, CA 92054

B | DTS20XXX-XXPX
DWG SIZE | CAGE CODE 11139 | SHEET 1 OF 1