DRAWING REVISIONS (RELEASE DATE ON FILE)			
REV	DOCUMENT	APP	APPROVAL DATE
E	CO 3274	V.RICE	7/18/16

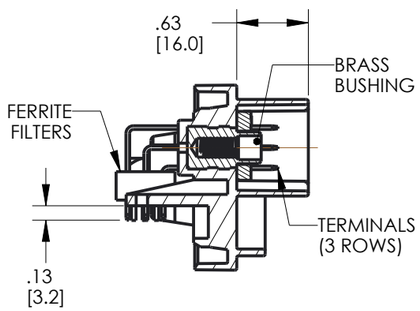

SECTION A-A
SCALE 3:4

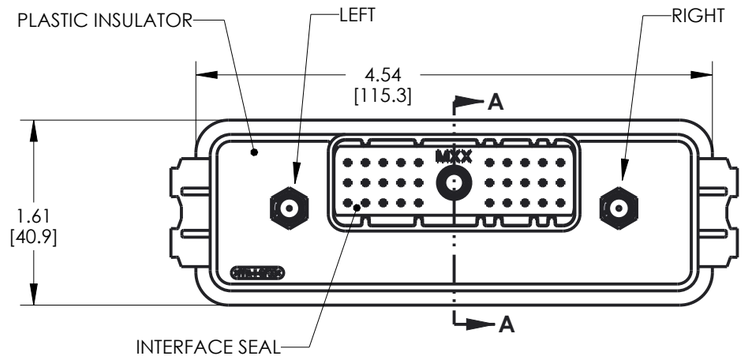

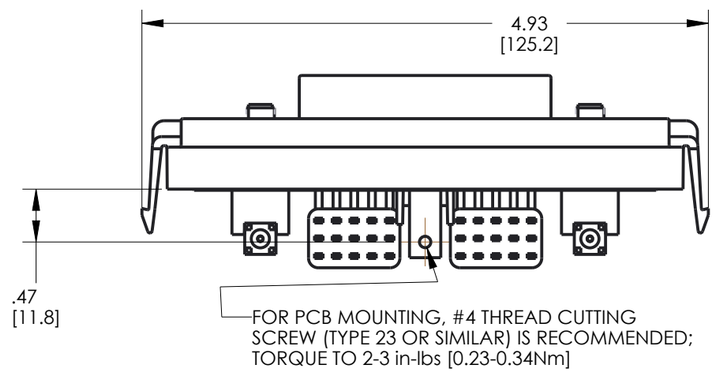

CINCH P/N: 5810630002 SHOWN
(30 POS HEADER WITH FILTERS)

RP SMA = REVERSE POLARITY SMA
SMA = STANDARD POLARITY SMA
LEFT RIGHT

HEADER	I/O	FERRITE	LEFT RF	RIGHT RF
5810630001	30	NO	RP SMA	SMA
5810630002	30	YES	RP SMA	SMA
5810630003	30	NO	N/A	SMA
5810630004	30	YES	N/A	SMA
5810630005	30	NO	RP SMA	N/A
5810630006	30	YES	RP SMA	N/A
5810630007	30	NO	RP SMA	RP SMA
5810630008	30	YES	RP SMA	RP SMA
5810630009	30	NO	SMA	SMA
5810630010	30	YES	SMA	SMA

NOTES:

1. ALL DIMENSIONS ARE IN INCHES; DIMENSIONS INSIDE [.XX] ARE IN mm, AS REFERENCE ONLY
2. MATERIALS:
   INSULATOR: 30% GLASS FILLED POLYMER, COLOR BLACK
   SMA: BODY: BRASS, NICKEL PLATED
   CONTACT: PHOSPHOR BRONZE, GOLD PLATING OVER NICKEL
   INSULATOR: PTFE
   INTERFACE SEAL: SILICONE RUBBER, COLOR BLUE
   INSULATOR: 30% GLASS FILLED POLYMER, COLOR BLACK
   BUSHING: BRASS ALLOY, UNPLATED 10-24 UNC THREAD
   TERMINAL BLADES: 1.5 mm BRASS WITH TIN OVER NICKEL PLATING
   FILTERS: FERRITE BLOCKS
3. ALL HEADERS ARE REFLOW OR WAVE SOLDERING PROCESS, ROHS COMPLIANT
4. SUGGESTED PCB THICKNESS: .062 [1.57]
5. IF USING FERRITE FILTER VERSION, TRACES SHOULD BE AVOIDED UNDER THE FERRITE SPACER FEET. SEE "PCB TOP SIDE PIN AREA WITH FERRITES DETAIL" - PAGE 2.
6. MATES WITH CINCH SHS PUSH-TO-SEAT HARNESS CONNECTOR P/N: 5810130029.
7. TORQUE SCREW OF MATING CONNECTOR TO 15 - 20 in-lbs [1.70 - 2.26 Nm]

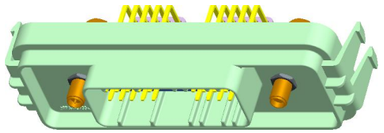

SCALE 1:2

UNITS ENGLISH INCHES	PRO/E	CINCH	MODELED BY: V. RICE; 1700 FINLEY RD LOMBARD, IL. 60148
DO NOT SCALE DRAWING	DESIGN ENGINEER: V. RICE; DATE: 5/16/12	TITLE: MODICE ME-RF 30 WAY / SMA HEADER ASSEMBLY	
	APPROVALS ON FILE	MATERIAL	CONTROL SPEC NUMBER
		MATERIAL SPEC NUMBER / FINISH	PROJECT NUMBER: A15085
CONFIDENTIAL		CAD FILE NUMBER: 5810630001S	DRAWING NUMBER: 5810630001S
		CAGE IDENT NO.: 71785 / SIZE: B	SCALE: 1:1 / SHEET 1 OF 2

THIS DOCUMENT IS THE PROPERTY OF CINCH. NEITHER THIS DOCUMENT NOR ANY OF THE INFORMATION CONTAINED IN IT MAY BE DUPLICATED OR DISCLOSED WITHOUT PRIOR WRITTEN CONSENT OF CINCH. ©COPYRIGHT 2008 CINCH

RECOMMENDED PCB TOP SIDE GENERAL ZONING AND KEEP-OUT AREAS

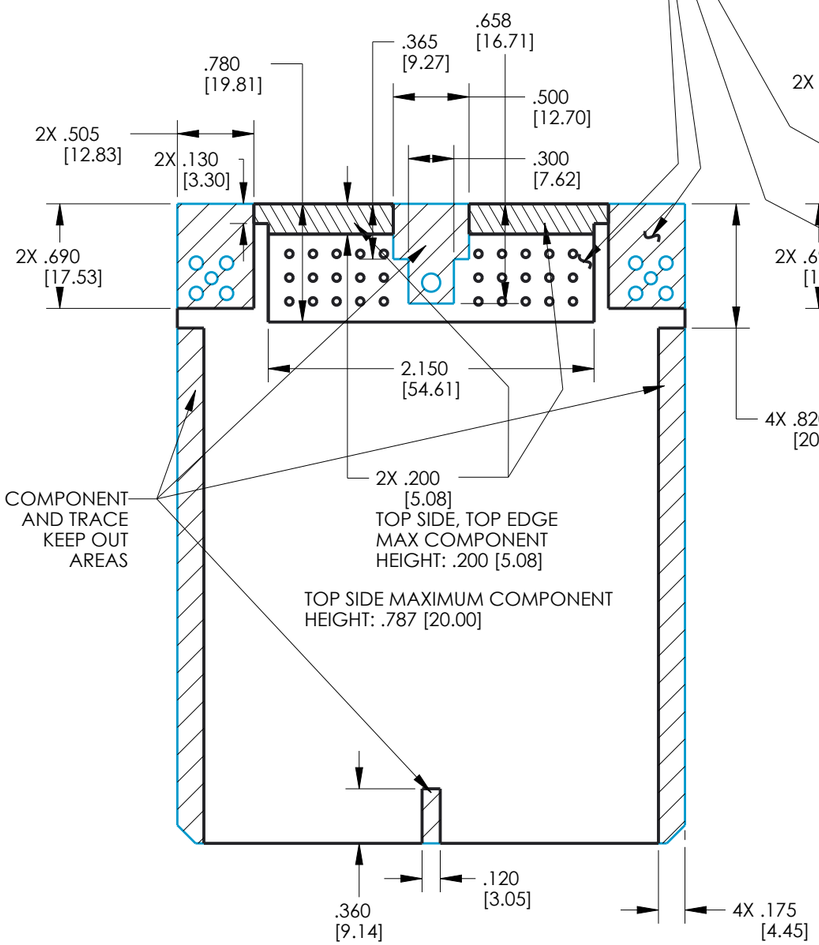

COMPONENT KEEP OUT AREA AROUND CONNECTOR PINS; TOP & BOTTOM SIDES

RECOMMENDED PCB BOTTOM SIDE GENERAL ZONING AND KEEP-OUT AREAS

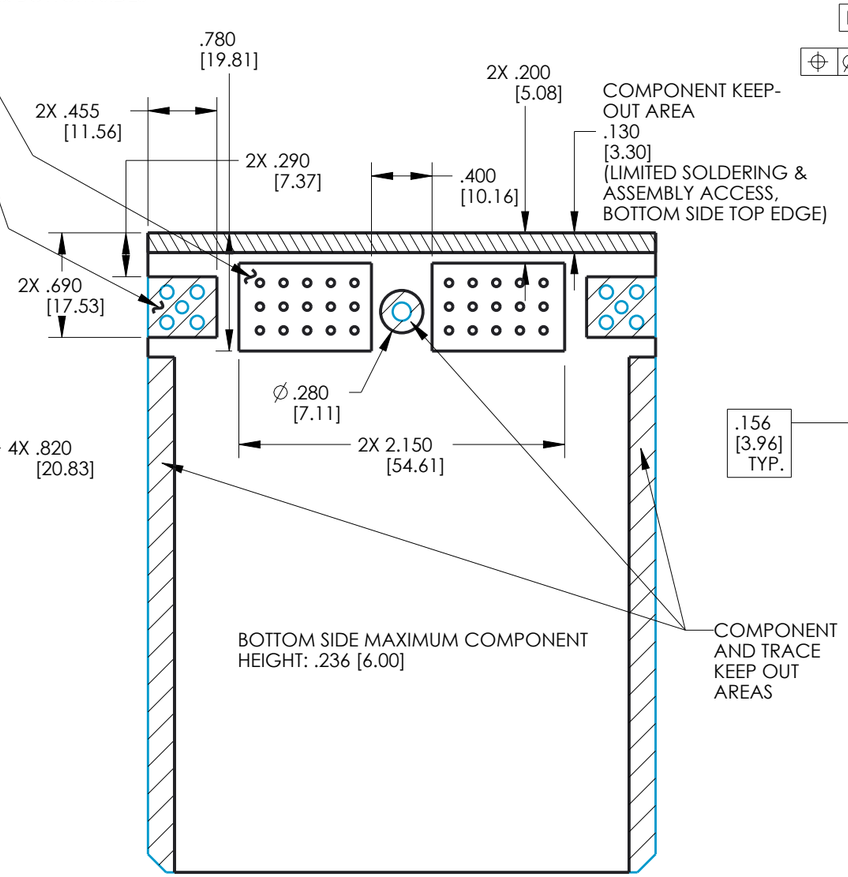

RECOMMENDED PCB OVERALL DIMENSIONS AND HOLE LOCATIONS

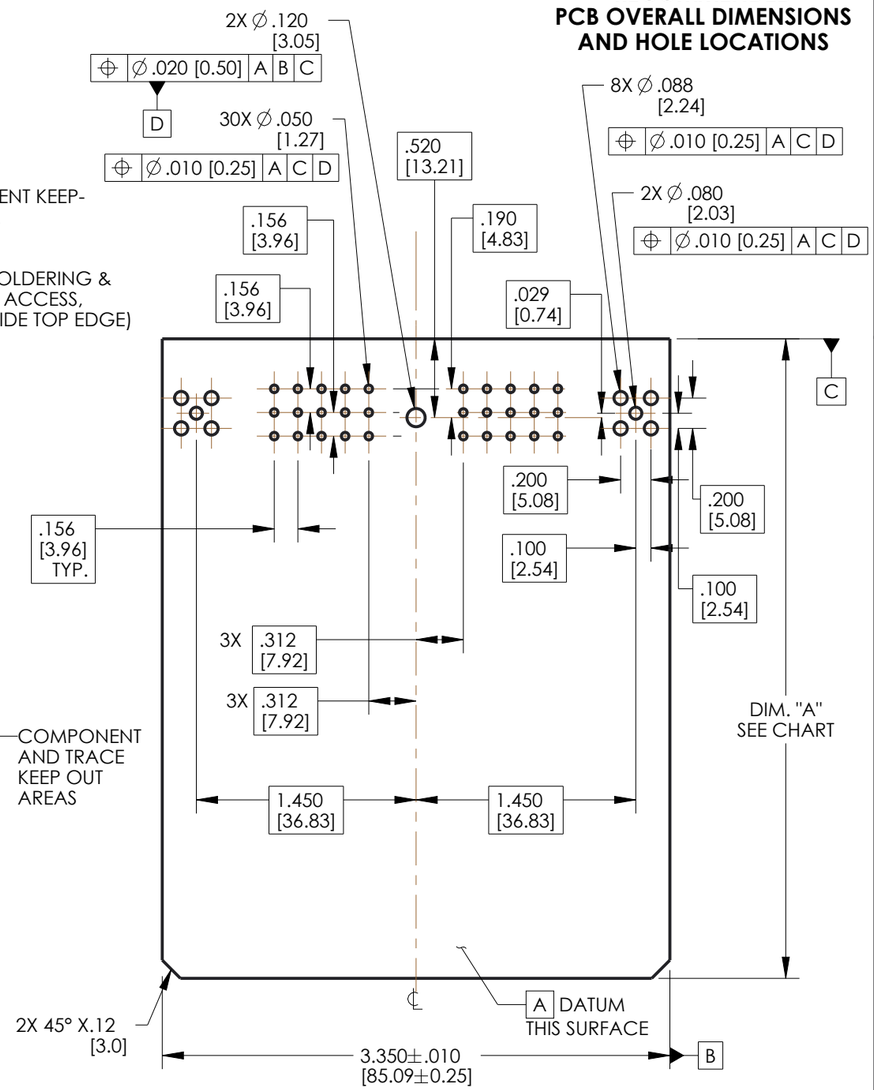

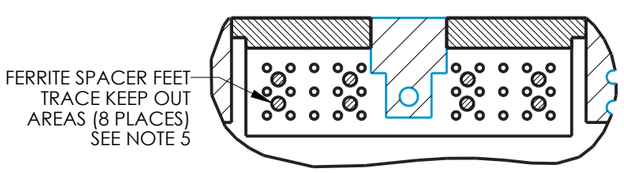

PCB TOP SIDE PIN AREA WITH FERRITES DETAIL

RECOMMENDED PCB LENGTH

DIM. "A" (SEE DRAWING)	USE WITH ENCLOSURE	
	PART NUMBER	DESCRIPTION
4.220± 0.015 [107.19±0.38]	581 01 30 065	ME
	581 01 30 075	ME WITH BREATHER
2.520± 0.015 [64.01±0.38]	581 01 30 090	MINI ME
	581 01 30 095	MINI ME WITH BREATHER

UNITS **ENGLISH INCHES**

DO NOT SCALE DRAWING

CINCH

1700 FINLEY RD
LOMBARD, IL. 60148

TITLE MODICE ME-RF 30 WAY / SMA HEADER ASSEMBLY

PRO/E DRAWING

CONFIDENTIAL
THIS DOCUMENT IS THE PROPERTY OF CINCH. NEITHER THIS DOCUMENT NOR ANY OF THE INFORMATION CONTAINED IN IT MAY BE DUPLICATED OR DISCLOSED WITHOUT PRIOR WRITTEN CONSENT OF CINCH.
©COPYRIGHT 2008 CINCH

CAD FILE NUMBER	DRAWING NUMBER	REV
5810630001S	5810630001S	E
CAGE IDENT NO. 71785 / SIZE B	SCALE 1:1	SHEET 2 OF 2