THIS DRAWING IS UNPUBLISHED. RELEASED FOR PUBLICATION - ,- .
© COPYRIGHT - By - ALL RIGHTS RESERVED.

LOC	DIST
—	—

REVISIONS

P	LTR	DESCRIPTION	DATE	DWN	APVD
	G	REVISED PER ECO-15-016062	09NOV15	KG	CD

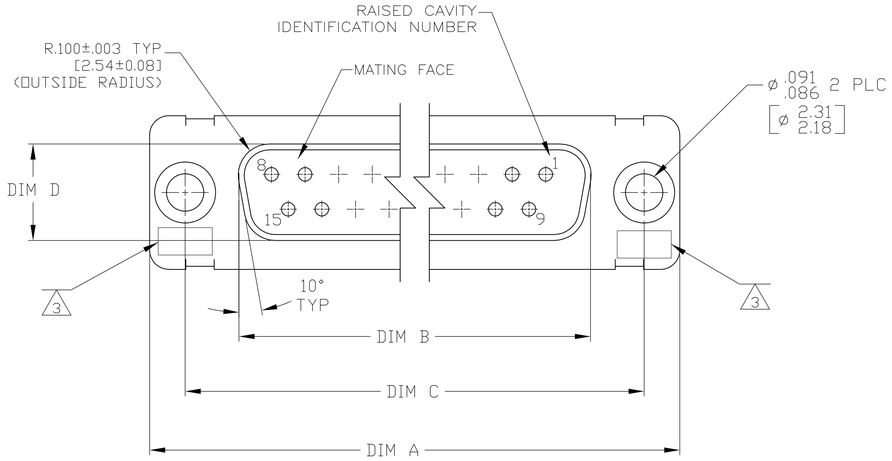

1. THE CONNECTOR DESCRIBED IN THIS DOCUMENT WILL MATE WITH ANY PLUG CONNECTOR WITH THE SAME INSERT ARRANGEMENT.

2. MARKED WITH .047-.062 [1.19-1.57] HIGH CHARACTERS. FAR SIDE REFERS TO THE WIDE SIDE OF THE KEYSTONE. NEAR SIDE REFERS TO THE NARROW SIDE OF THE KEYSTONE. WHEN SPACE IS LIMITED MARKING CAN BE SPLIT BETWEEN FRONT AND REAR SHELL.

3. UL/CSA DESIGNATION STAMPED IN THIS AREA.

4. CONNECTOR ASSEMBLY WITHOUT CONTACTS, MFG'S P/N 205090-1. MUST BE ORDERED SEPARATELY.

5. CONNECTOR ASSEMBLY SUPPLIED WITH CONTACTS, MFG'S P/N 205090-1. PACKAGED IN A SEPARATE CONTAINER. QTY = NO. OF POSN. (SEE TABLE).

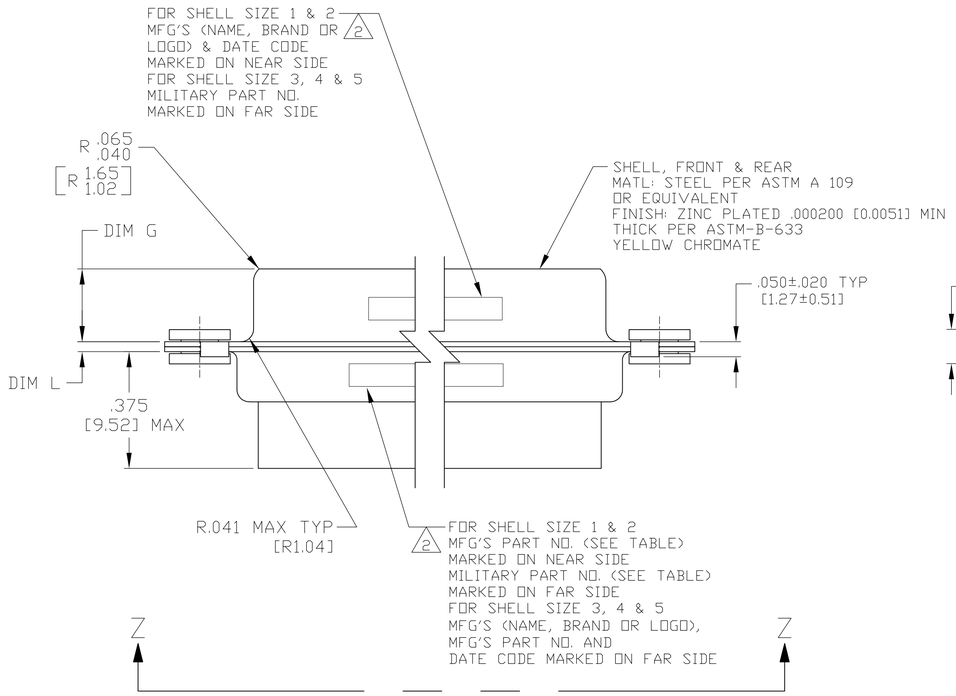

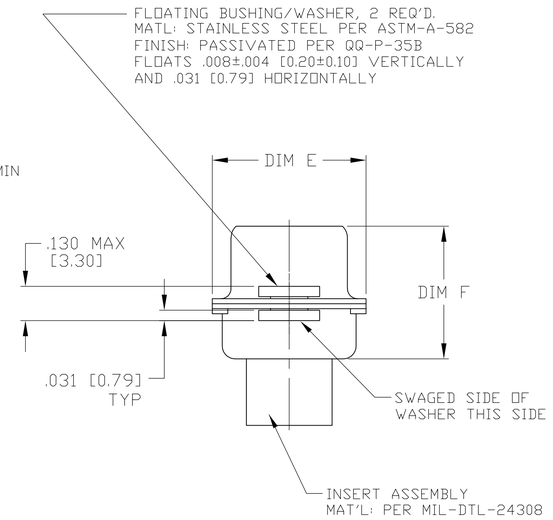

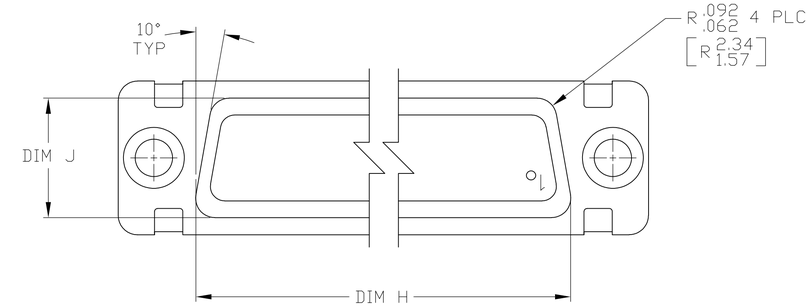

VIEW Z-Z

5 SIZE 20 SOCKET CONTACT
BODY MATERIAL: COPPER ALLOY PER MIL-C-39029 & MIL-DTL-24308.
PLATING: GOLD PER ASTM-B-488 (TYPE III) OVER NICKEL PER AMS-QQ-N-290.
HOOD MAT'L: STAINLESS STEEL
FINISH: PASSIVATED

REMARKS	MILITARY P/N ON PACKAGE	MILITARY P/N ON CONNECTOR 2	MARKED MFG'S PART NUMBER 2	L	J	H	G	F	E	D	C	B	A	INSERT ARRANGEMENT	NO OF POS	SHELL SIZE	PART NUMBER
5	M24308/2-27Z	M24308/2-27Z	1-1757822-0	.049 [1.24] .029 [0.74]	.544 [13.82] .524 [13.31]	2.188 [55.58] 2.168 [55.07]	.248 [6.30] .238 [6.05]	.439 [11.15] .419 [10.64]	.620 [15.75] .590 [14.99]	.428 [10.87] .418 [10.62]	2.411 [61.24] 2.401 [60.99]	2.069 [52.55] 2.059 [52.30]	2.650 [67.31] 2.620 [66.55]	MS18277-1	50	5	1-1757822-0
5	M24308/2-26Z	M24308/2-26Z	1757822-9	.049 [1.24] .029 [0.74]	.432 [10.97] .412 [10.46]	2.282 [57.96] 2.262 [57.45]	.248 [6.30] .238 [6.05]	.439 [11.15] .419 [10.64]	.509 [12.93] .479 [12.17]	.316 [8.03] .306 [7.77]	2.505 [63.63] 2.495 [63.37]	2.164 [54.97] 2.154 [54.71]	2.744 [69.70] 2.714 [68.94]	MS18276-1	37	4	1757822-9
5	M24308/2-25Z	M24308/2-25Z	1757822-8	.049 [1.24] .029 [0.74]	.432 [10.97] .412 [10.46]	1.635 [41.53] 1.615 [41.02]	.248 [6.30] .238 [6.05]	.439 [11.15] .419 [10.64]	.509 [12.93] .479 [12.17]	.316 [8.03] .306 [7.77]	1.857 [47.17] 1.847 [46.91]	1.516 [38.51] 1.506 [38.25]	2.103 [53.42] 2.073 [52.65]	MS18275-1	25	3	1757822-8
5	M24308/2-24Z	M24308/2-24Z	1757822-7	.040 [1.02] .020 [0.51]	.432 [10.97] .412 [10.46]	1.093 [27.76] 1.073 [27.25]	.248 [6.30] .238 [6.05]	.439 [11.15] .419 [10.64]	.509 [12.93] .479 [12.17]	.316 [8.03] .306 [7.77]	1.317 [33.45] 1.307 [33.20]	.976 [24.79] .966 [24.54]	1.556 [39.52] 1.526 [38.76]	MS18274-1	15	2	1757822-7
5	M24308/2-23Z	M24308/2-23Z	1757822-6	.040 [1.02] .020 [0.51]	.432 [10.97] .412 [10.46]	.769 [19.53] .749 [19.02]	.248 [6.30] .238 [6.05]	.439 [11.15] .419 [10.64]	.509 [12.93] .479 [12.17]	.316 [8.03] .306 [7.77]	.989 [25.12] .979 [24.87]	.648 [16.46] .638 [16.21]	1.228 [31.19] 1.198 [30.43]	MS18273-1	9	1	1757822-6
4	M24308/2-296Z	M24308/2-27Z	1-1757822-0	.049 [1.24] .029 [0.74]	.544 [13.82] .524 [13.31]	2.188 [55.58] 2.168 [55.07]	.248 [6.30] .238 [6.05]	.439 [11.15] .419 [10.64]	.620 [15.75] .590 [14.99]	.428 [10.87] .418 [10.62]	2.411 [61.24] 2.401 [60.99]	2.069 [52.55] 2.059 [52.30]	2.650 [67.31] 2.620 [66.55]	MS18277-1	50	5	1757822-5
4	M24308/2-295Z	M24308/2-26Z	1757822-9	.049 [1.24] .029 [0.74]	.432 [10.97] .412 [10.46]	2.282 [57.96] 2.262 [57.45]	.248 [6.30] .238 [6.05]	.439 [11.15] .419 [10.64]	.509 [12.93] .479 [12.17]	.316 [8.03] .306 [7.77]	2.505 [63.63] 2.495 [63.37]	2.164 [54.97] 2.154 [54.71]	2.744 [69.70] 2.714 [68.94]	MS18276-1	37	4	1757822-4
4	M24308/2-294Z	M24308/2-25Z	1757822-8	.049 [1.24] .029 [0.74]	.432 [10.97] .412 [10.46]	1.635 [41.53] 1.615 [41.02]	.248 [6.30] .238 [6.05]	.439 [11.15] .419 [10.64]	.509 [12.93] .479 [12.17]	.316 [8.03] .306 [7.77]	1.857 [47.17] 1.847 [46.91]	1.516 [38.51] 1.506 [38.25]	2.103 [53.42] 2.073 [52.65]	MS18275-1	25	3	1757822-3
4	M24308/2-293Z	M24308/2-24Z	1757822-7	.040 [1.02] .020 [0.51]	.432 [10.97] .412 [10.46]	1.093 [27.76] 1.073 [27.25]	.248 [6.30] .238 [6.05]	.439 [11.15] .419 [10.64]	.509 [12.93] .479 [12.17]	.316 [8.03] .306 [7.77]	1.317 [33.45] 1.307 [33.20]	.976 [24.79] .966 [24.54]	1.556 [39.52] 1.526 [38.76]	MS18274-1	15	2	1757822-2
4	M24308/2-292Z	M24308/2-23Z	1757822-6	.040 [1.02] .020 [0.51]	.432 [10.97] .412 [10.46]	.769 [19.53] .749 [19.02]	.248 [6.30] .238 [6.05]	.439 [11.15] .419 [10.64]	.509 [12.93] .479 [12.17]	.316 [8.03] .306 [7.77]	.989 [25.12] .979 [24.87]	.648 [16.46] .638 [16.21]	1.228 [31.19] 1.198 [30.43]	MS18273-1	9	1	1757822-1

THIS DRAWING IS A CONTROLLED DOCUMENT.

DIMENSIONS: INCHES

TOLERANCES UNLESS OTHERWISE SPECIFIED:
0 PLC ± –
1 PLC ± –
2 PLC ± –
3 PLC ± .005 [0.13]
4 PLC ± –
ANGLES ± 1°

MATERIAL: SEE CALLOUTS
FINISH: SEE CALLOUTS

DWN C.C.THOMAS 5-24-05
CHK D.MILLER 5-27-05
APVD D.MILLER 5-27-05
PRODUCT SPEC —
APPLICATION SPEC —
WEIGHT —

TE Connectivity

NAME: AMPLIMITE RECEPTACLE ASSY,SIZE 1 THRU 5 SERIES 109 WITH FLOAT BUSHINGS AND ZINC PLATED SHELLS

SIZE A1 | CAGE CODE 00779 | DRAWING NO C-1757822 | RESTRICTED TO —

CUSTOMER DRAWING | SCALE 4:1 | SHEET 1 OF 1 | REV G

4805 (3/11)