Jan.1.2022 Copyright 2022 HIROSE ELECTRIC CO., LTD. All Rights Reserved.
In case of consideration for using Automotive equipment / device which demand high reliability, kindly contact our sales window correspondents.

	COUNT	DESCRIPTION OF REVISIONS	BY	CHKD	DATE		COUNT	DESCRIPTION OF REVISIONS	BY	CHKD	DATE
△					. .	△					. .
△					. .	△					. .
△					. .	△					. .

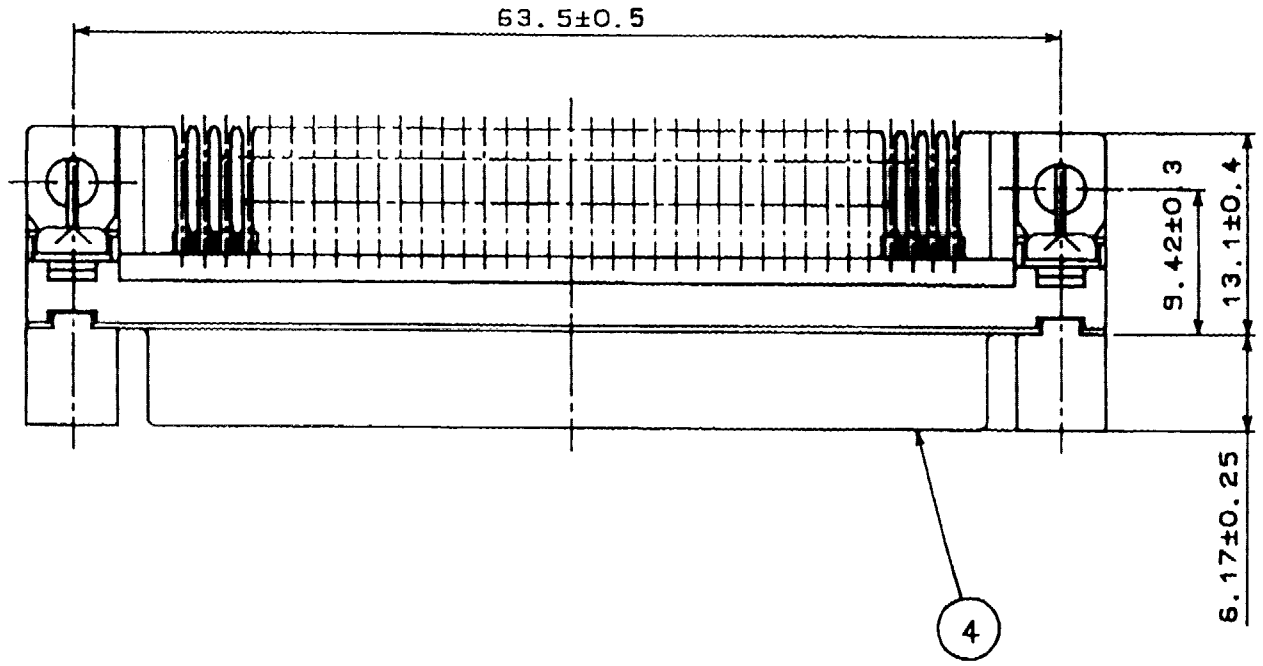

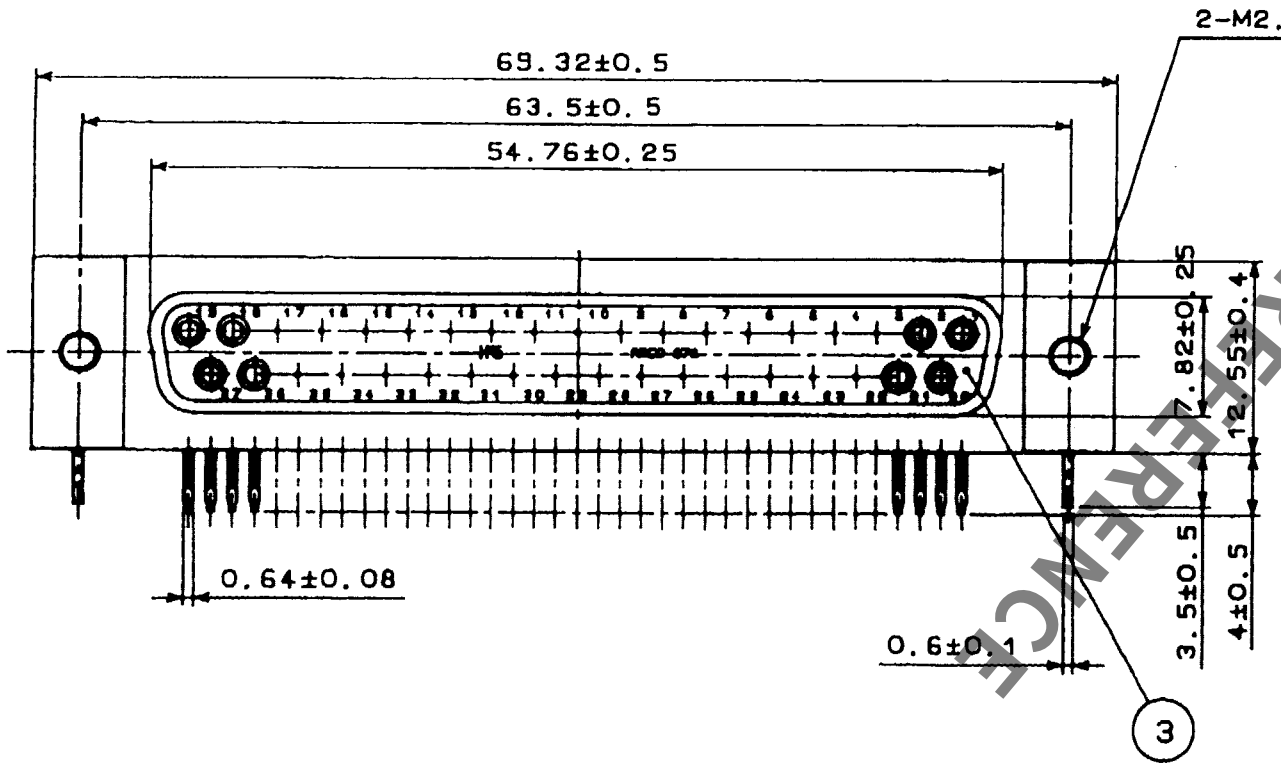

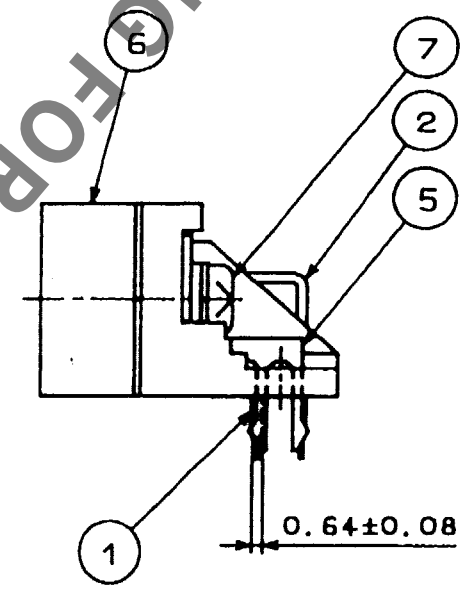

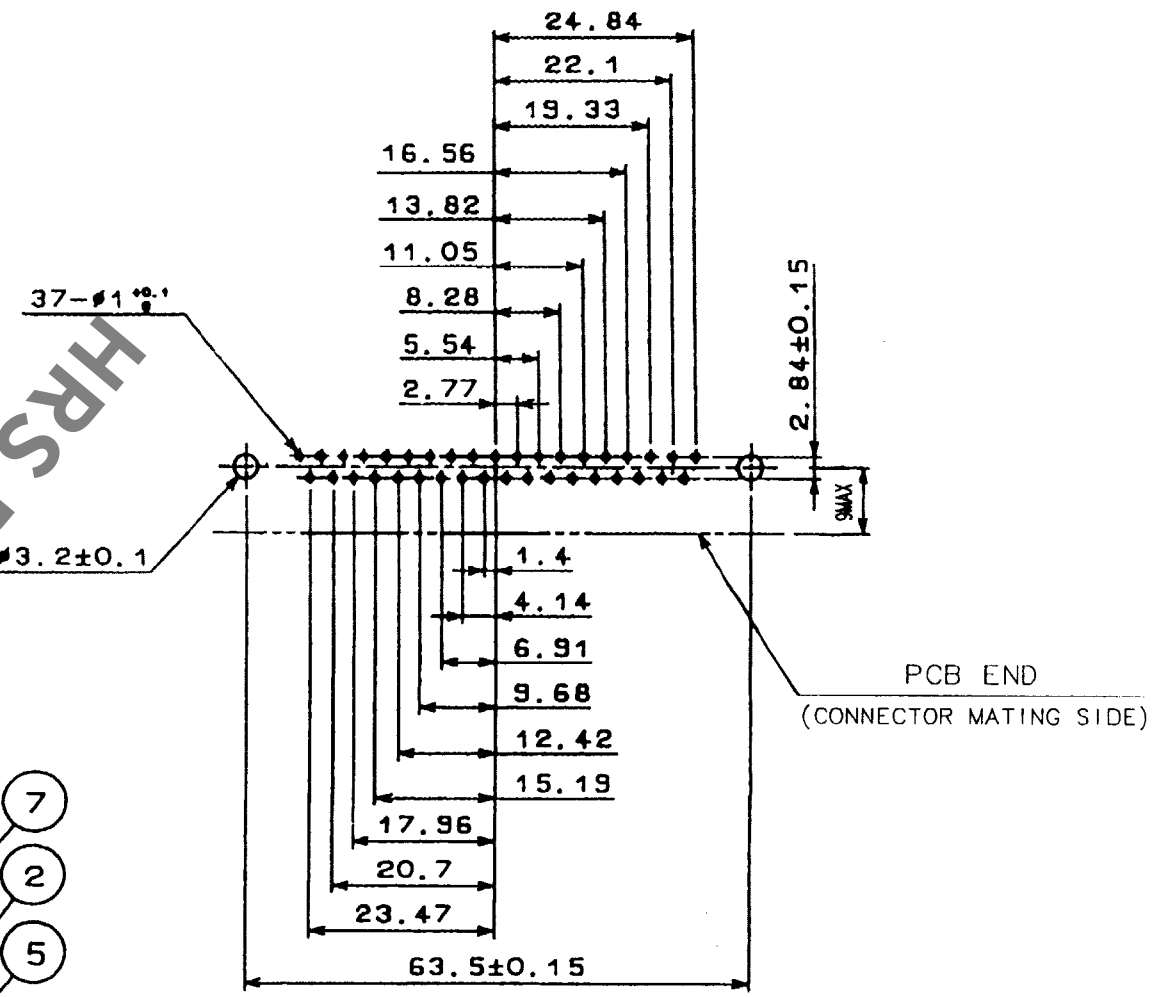

NOTES 1. PLEASE KEEP THE TOLERANCE TO LESS THAN ±0.1 FOR THE DIMENSIONS WITHOUT TOLERANCE.

2. THICKNESS OF PC BOARD SHALL BE 1.6mm.

RECOMMENDED PC BOARD HOLE PATTERN
(SCALE 1:1)

FOR REFERENCE
HRS DRAWING

NO.	MATERIAL	FINISH, REMARKS	NO.	MATERIAL	FINISH, REMARKS	
4	STEEL	NICKEL PLATING				
3	PBT	UL94V-0(BLACK)	7	STEEL	NICKEL PLATING	M2.6×0.45×8
2	PHOSPHOR BRONZE	SELECTIVE GOLD PLATING 0.2μm	6	ZINC ALLOY DIE CASTING	NICKEL PLATING	
1	PHOSPHOR BRONZE	SELECTIVE GOLD PLATING 0.2μm	5	PHOSPHOR BRONZE	TIN PLATING	

CODE NO.(OLD)	DRAWN	DESIGNED	CHECKED	APPROVED	RELEASED
CL	03·7·28	03·7·28	03·07·29	03·07·30	. .

SCALE 2 : 1	DRAWING NO. EDC3-021163-02	PART NO. RDCD-37SE-LN(55)
UNITS mm	HRS HIROSE ELECTRIC CO., LTD	CODE NO. CL211-0423-4-55 1/1

FORM NO.229

TO
Q