128Kb Serial SPI MRAM

FEATURES

- No write delays
- Unlimited write endurance
- Data retention greater than 20 years
- Automatic data protection on power loss
- Block write protection
- Fast, simple SPI interface with up to 40 MHz clock rate
- 2.7 to 3.6 Volt power supply range
- Low current sleep mode
- Industrial and Automotive temperatures
- Available in 8-pin DFN Small Flag RoHS-compliant package.
- Direct replacement for serial EEPROM, Flash, FeRAM
- Industrial Grade and AEC-Q100 Grade 1 and Grade 3 options
- Moisture Sensitivity MSL-3

Small Flag DFN

INTRODUCTION

The **MR25H128A** is a 128Kbit magnetoresistive random access memory (MRAM) device organized as 16,384 words of 8 bits. The **MR25H128A** offers serial EEPROM and serial Flash compatible read/write timing with no write delays and unlimited read/write endurance.

Unlike other serial memories, both reads and writes can occur randomly in memory with no delay between writes. The **MR25H128A** is the ideal memory solution for applications that must store and retrieve data and programs quickly using a small number of I/O pins.

The **MR25H128A** is available in a 5 mm x 6 mm 8-pin DFN Small Flag package compatible with serial EEPROM, Flash, and FeRAM products.

The **MR25H128A** provides highly reliable data storage over a wide range of temperatures. The product is offered with industrial (-40° to +85 °C) and AEC-Q100 Grade 1 (-40°C to +125 °C) and AEC-Q100 Grade 3 (-40° to +85 °C) operating temperature range options.

CONTENTS

1. DEVICE PIN ASSIGNMENT..... 3
2. SPI COMMUNICATIONS PROTOCOL..... 4
3. ELECTRICAL SPECIFICATIONS..... 10
4. TIMING SPECIFICATIONS..... 14
5. ORDERING INFORMATION..... 17
6. MECHANICAL DRAWING..... 18
7. REVISION HISTORY..... 19
How to Reach Us..... 20

Copyright © 2018 Everspin Technologies, Inc.

1. DEVICE PIN ASSIGNMENT

Overview

The MR25H128A is a serial MRAM with memory array logically organized as 16Kx8 using the four pin interface of chip select (CS), serial input (SI), serial output (SO) and serial clock (SCK) of the serial peripheral interface (SPI) bus. Serial MRAM implements a subset of commands common to today's SPI EEPROM and Flash components allowing MRAM to replace these components in the same socket and interoperate on a shared SPI bus. Serial MRAM offers superior write speed, unlimited endurance, low standby & operating power, and more reliable data retention compared to available serial memory alternatives.

Figure 1.1 Block Diagram

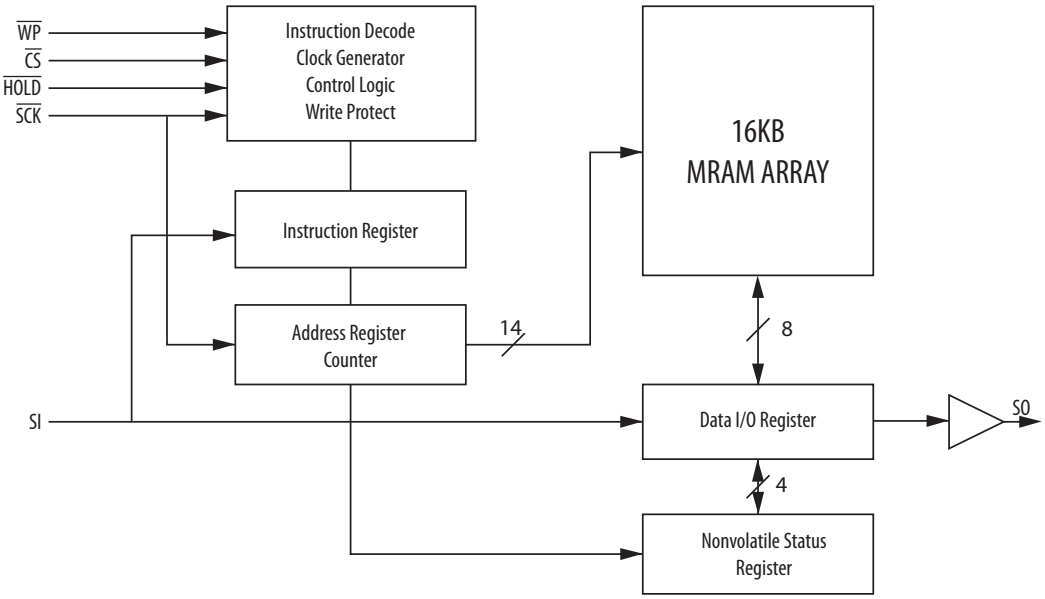

System Configuration

Single or multiple devices can be connected to the bus as shown in Figure 1.2. Pins SCK, SO and SI are common among devices. Each device requires $\overline{CS}$ and $\overline{HOLD}$ pins to be driven separately.

Figure 1.2 System Configuration

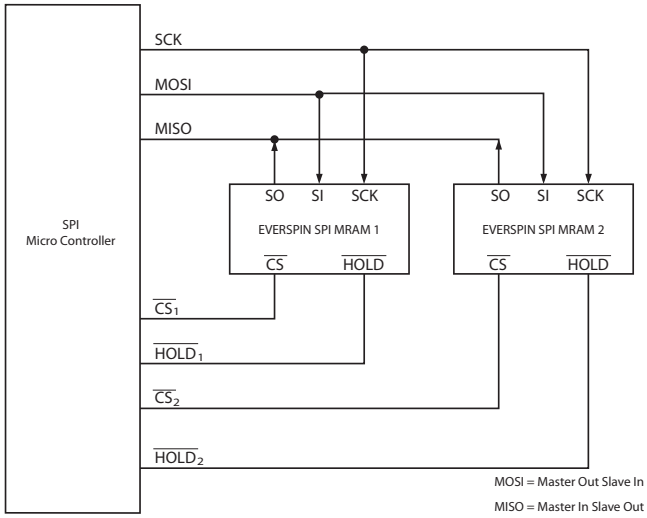

Figure 1.3 Pin Diagrams (Top View)

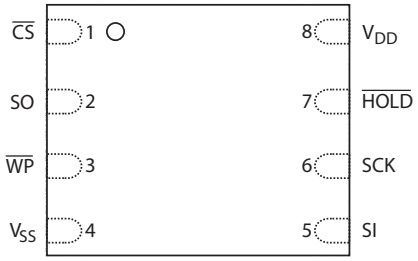

8-Pin DFN Small Flag Package

Table 1.1 Pin Functions

Signal Name	Pin	I/O	Function	Description
$\overline{CS}$	1	Input	Chip Select	An active low chip select for the serial MRAM. When chip select is high, the memory is powered down to minimize standby power, inputs are ignored and the serial output pin is Hi-Z. Multiple serial memories can share a common set of data pins by using a unique chip select for each memory.
SO	2	Output	Serial Output	The data output pin is driven during a read operation and remains Hi-Z at all other times. SO is Hi-Z when $\overline{HOLD}$ is low. Data transitions on the data output occur on the falling edge of SCK.
$\overline{WP}$	3	Input	Write Protect	A low on the write protect input prevents write operations to the Status Register.
V_{SS}	4	Supply	Ground	Power supply ground pin.
SI	5	Input	Serial Input	All data is input to the device through this pin. This pin is sampled on the rising edge of SCK and ignored at other times. SI can be tied to SO to create a single bidirectional data bus if desired.
SCK	6	Input	Serial Clock	Synchronizes the operation of the MRAM. The clock can operate up to 40 MHz to shift commands, address, and data into the memory. Inputs are captured on the rising edge of clock. Data outputs from the MRAM occur on the falling edge of clock. The serial MRAM supports both SPI Mode 0 (CPOL=0, CPHA=0) and Mode 3 (CPOL=1, CPHA=1). In Mode 0, the clock is normally low. In Mode 3, the clock is normally high. Memory operation is static so the clock can be stopped at any time.
$\overline{HOLD}$	7	Input	Hold	A low on the Hold pin interrupts a memory operation for another task. When $\overline{HOLD}$ is low, the current operation is suspended. The device will ignore transitions on the $\overline{CS}$ and SCK when $\overline{HOLD}$ is low. All transitions of $\overline{HOLD}$ must occur while $\overline{CS}$ is low.
V_{DD}	8	Supply	Power Supply	Power supply voltage from +2.7 to +3.6 volts.

2. SPI COMMUNICATIONS PROTOCOL

MR25H128A can be operated in either SPI Mode 0 (CPOL=0, CPHA =0) or SPI Mode 3 (CPOL=1, CPHA=1). For both modes, inputs are captured on the rising edge of the clock and data outputs occur on the falling edge of the clock. When not conveying data, SCK remains low for Mode 0; while in Mode 3, SCK is high. The memory determines the mode of operation (Mode 0 or Mode 3) based upon the state of the SCK when $\overline{CS}$ falls.

All memory transactions start when $\overline{CS}$ is brought low to the memory. The first byte is a command code. Depending upon the command, subsequent bytes of address are input. Data is either input or output. There is only one command performed per $\overline{CS}$ active period. $\overline{CS}$ must go inactive before another command can be accepted. To ensure proper part operation according to specifications, it is necessary to terminate each access by raising $\overline{CS}$ at the end of a byte (a multiple of 8 clock cycles from $\overline{CS}$ dropping) to avoid partial or aborted accesses.

Table 2.1 Command Codes

Instruction	Description	Binary Code	Hex Code	Address Bytes	Data Bytes
WREN	Write Enable	0000 0110	06h	0	0
WRDI	Write Disable	0000 0100	04h	0	0
RDSR	Read Status Register	0000 0101	05h	0	1
WRSR	Write Status Register	0000 0001	01h	0	1
READ	Read Data Bytes	0000 0011	03h	2	1 to ∞
WRITE	Write Data Bytes	0000 0010	02h	2	1 to ∞
SLEEP	Enter Sleep Mode	1011 1001	B9h	0	0
WAKE	Exit Sleep Mode	1010 1011	ABh	0	0

Status Register and Block Write Protection

The status register consists of the 8 bits listed in table 2.2. Status register bits BP0 and BP1 define the memory block arrays that are protected as described in table 2.3. The Status Register Write Disable bit (SRWD) is used in conjunction with bit 1 (WEL) and the Write Protection pin ($\overline{WP}$) as shown in table 2.4 to enable writes to status register bits. The fast writing speed of MR25H128A does not require write status bits. The state of bits 6,5,4, and 0 can be user modified and do not affect memory operation. All bits in the status register are pre-set from the factory to the "0" state.

Table 2.2 Status Register Bit Assignments

Bit 7	Bit 6	Bit 5	Bit 4	Bit 3	Bit 2	Bit 1	Bit 0
SRWD	Don't Care	Don't Care	Don't Care	BP1	BP0	WEL	Don't Care

Copyright © 2018 Everspin Technologies, Inc.

Table 2.3 Block Memory Write Protection

Status Register		Memory Contents	
BP1	**BP0**	**Protected Area**	**Unprotected Area**
0	0	None	All Memory
0	1	Upper Quarter	Lower Three-Quarters
1	0	Upper Half	Lower Half
1	1	All	None

Table 2.4 Memory Protection Modes

WEL	SRWD	$\overline{WP}$	Protected Blocks	Unprotected Blocks	Status Register
0	X	X	Protected	Protected	Protected
1	0	X	Protected	Writable	Writable
1	1	Low	Protected	Writable	Protected
1	1	High	Protected	Writable	Writable

When WEL is reset to 0, writes to all blocks and the status register are protected. When WEL is set to 1, BP0 and BP1 determine which memory blocks are protected. While SRWD is reset to 0 and WEL is set to 1, status register bits BP0 and BP1 can be modified. Once SRWD is set to 1, $\overline{WP}$ must be high to modify SRWD, BP0 and BP1.

Read Status Register (RDSR)

The Read Status Register (RDSR) command allows the Status Register to be read. The Status Register can be read at any time to check the status of write enable latch bit, status register write protect bit, and block write protect bits. For MR25H128A, the write in progress bit (bit 0) is not written by the memory because there is no write delay. The RDSR command is entered by driving $\overline{CS}$ low, sending the command code, and then driving $\overline{CS}$ high.

Figure 2.1 RDSR

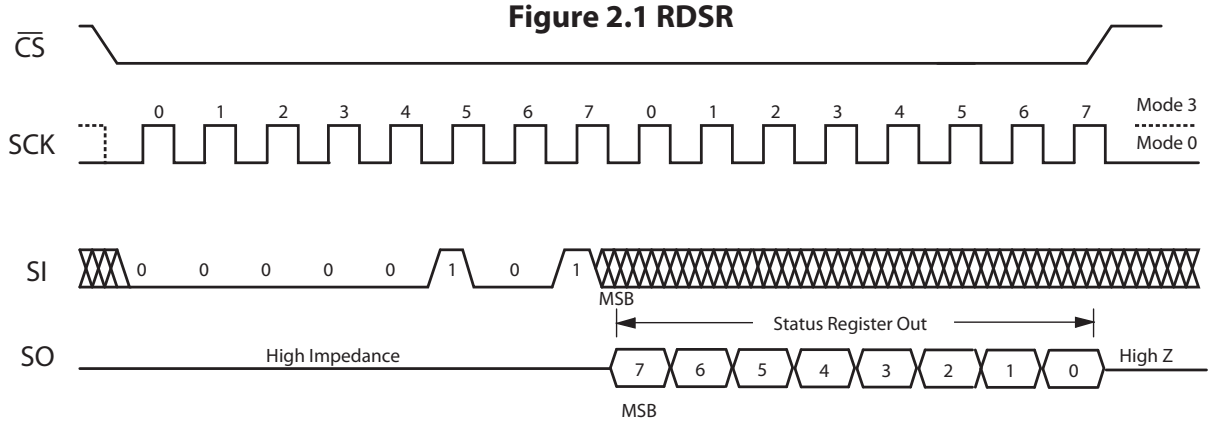

Write Enable (WREN)

The Write Enable (WREN) command sets the Write Enable Latch (WEL) bit in the status register to 1. The WEL bit must be set prior to writing in the status register or the memory. The WREN command is entered by driving $\overline{CS}$ low, sending the command code, and then driving $\overline{CS}$ high.

Figure 2.2 WREN

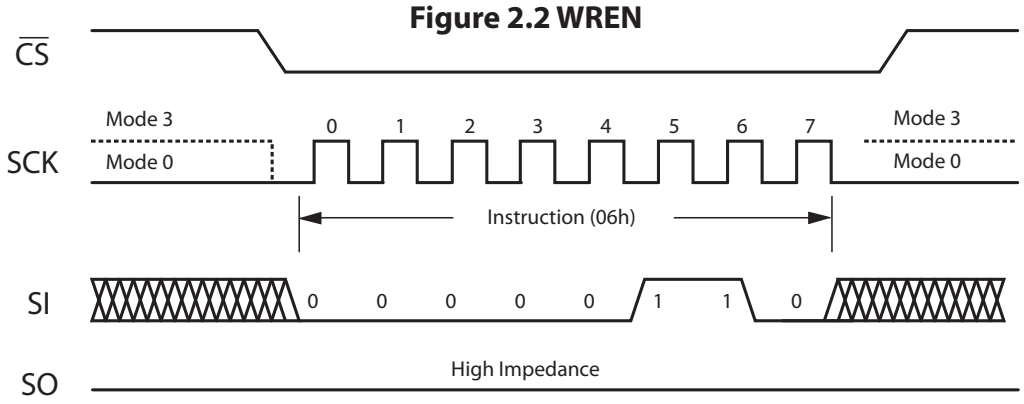

Write Disable (WRDI)

The Write Disable (WRDI) command resets the WEL bit in the status register to 0. This prevents writes to status register or memory. The WRDI command is entered by driving $\overline{CS}$ low, sending the command code, and then driving $\overline{CS}$ high.

The WEL bit is reset to 0 on power-up or completion of WRDI.

Figure 2.3 WRDI

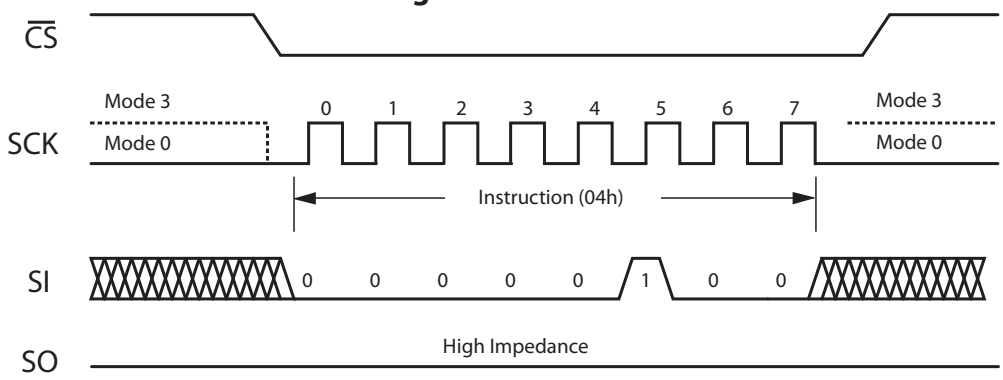

Write Status Register (WRSR)

The Write Status Register (WRSR) command allows new values to be written to the Status Register. The WRSR command is not executed unless the Write Enable Latch (WEL) has been set to 1 by executing a WREN command while pin $\overline{WP}$ and bit SRWD correspond to values that make the status register writable as seen in table 2.4. Status Register bits are non-volatile with the exception of the WEL which is reset to 0 upon power cycling.

Copyright © 2018 Everspin Technologies, Inc.

The WRSR command is entered by driving $\overline{CS}$ low, sending the command code and status register write data byte, and then driving $\overline{CS}$ high.

Figure 2.4 WRSR

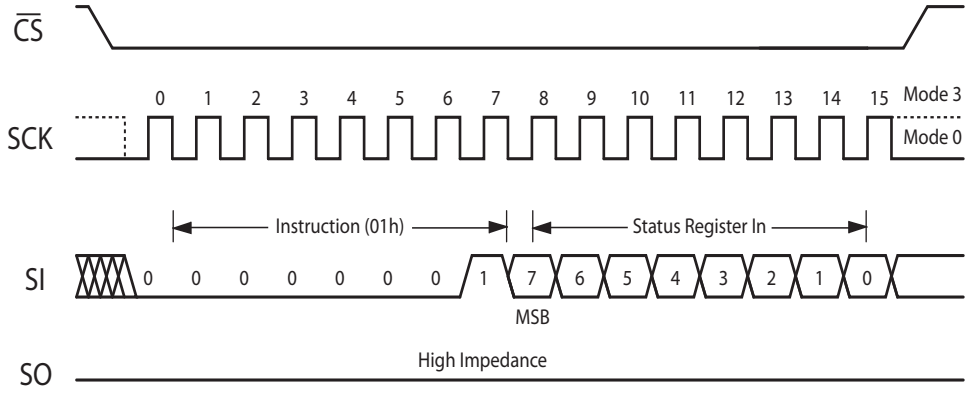

Read Data Bytes (READ)

The Read Data Bytes (READ) command allows data bytes to be read starting at an address specified by the 16-bit address. Only address bits 0-13 are decoded by the memory. The data bytes are read out sequentially from memory until the read operation is terminated by bringing $\overline{CS}$ high The entire memory can be read in a single command. The address counter will roll over to 0000h when the address reaches the top of memory.

The READ command is entered by driving $\overline{CS}$ low and sending the command code. The memory drives the read data bytes on the SO pin. Reads continue as long as the memory is clocked. The command is terminated by bring $\overline{CS}$ high.

Figure 2.5 READ

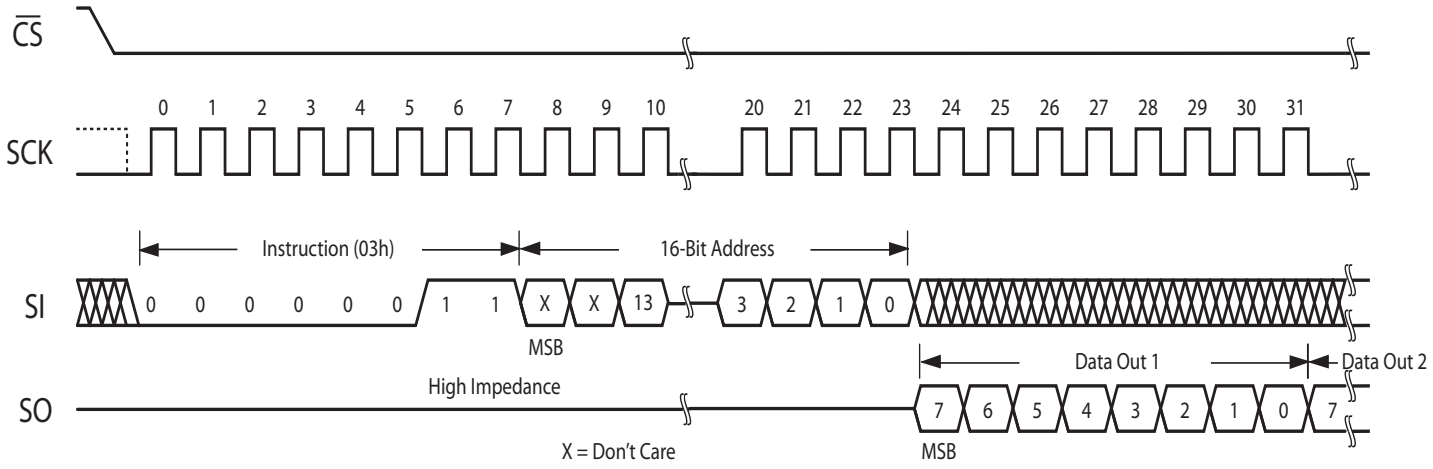

Write Data Bytes (WRITE)

The Write Data Bytes (WRITE) command allows data bytes to be written starting at an address specified by the 16-bit address. Only address bits 0-13 are decoded by the memory. The data bytes are written sequentially in memory until the write operation is terminated by bringing $\overline{CS}$ high. The entire memory can be written in a single command. The address counter will roll over to 0000h when the address reaches the top of memory.

Unlike EEPROM or Flash Memory, MRAM can write data bytes continuously at its maximum rated clock speed without write delays or data polling. Back to back WRITE commands to any random location in memory can be executed without write delay. MRAM is a random access memory rather than a page, sector, or block organized memory making it ideal for both program and data storage.

The WRITE command is entered by driving $\overline{CS}$ low, sending the command code, and then sequential write data bytes. Writes continue as long as the memory is clocked. The command is terminated by bringing $\overline{CS}$ high.

Figure 2.6 WRITE

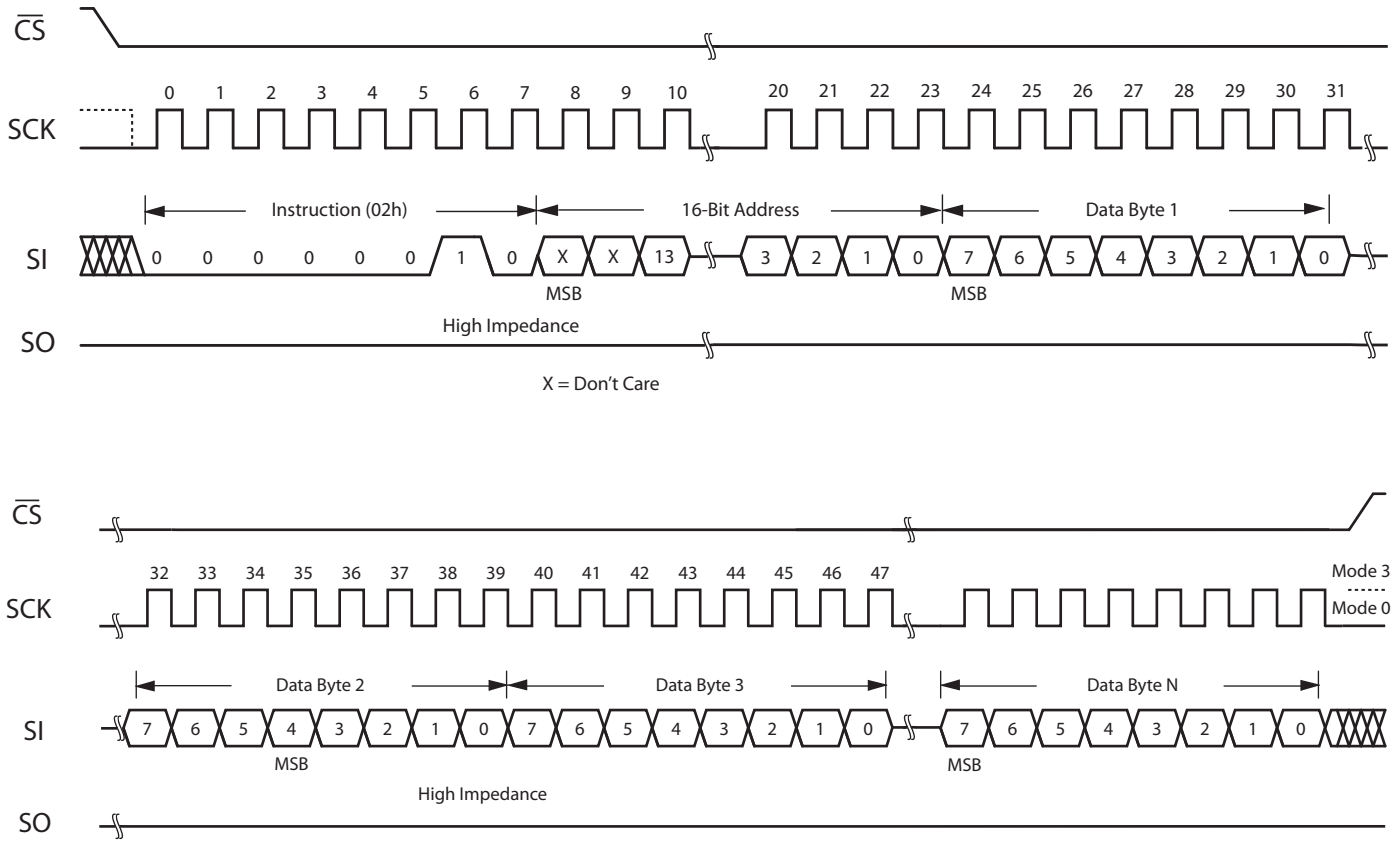

Enter Sleep Mode (SLEEP)

The Enter Sleep Mode (SLEEP) command turns off all MRAM power regulators in order to reduce the overall chip standby power to 3 µA typical. The SLEEP command is entered by driving $\overline{CS}$ low, sending the command code, and then driving $\overline{CS}$ high. The standby current is achieved after time, t_{DP}. If power is removed when the part is in sleep mode, upon power restoration, the part enters normal standby. The only valid command following SLEEP mode entry is a WAKE command.

Figure 2.7 SLEEP

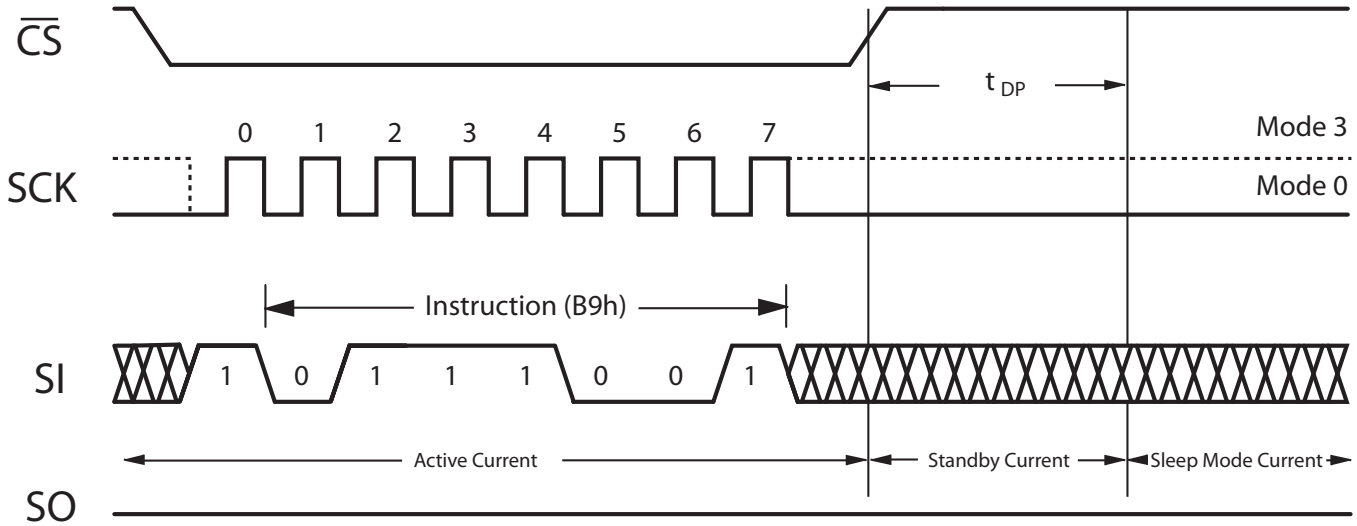

Exit Sleep Mode (WAKE)

The Exit Sleep Mode (WAKE) command turns on internal MRAM power regulators to allow normal operation. The WAKE command is entered by driving $\overline{CS}$ low, sending the command code, and then driving $\overline{CS}$ high. The memory returns to standby mode after t_{RDP}. The $\overline{CS}$ pin must remain high until the t_{RDP} period is over.

Figure 2.8 WAKE

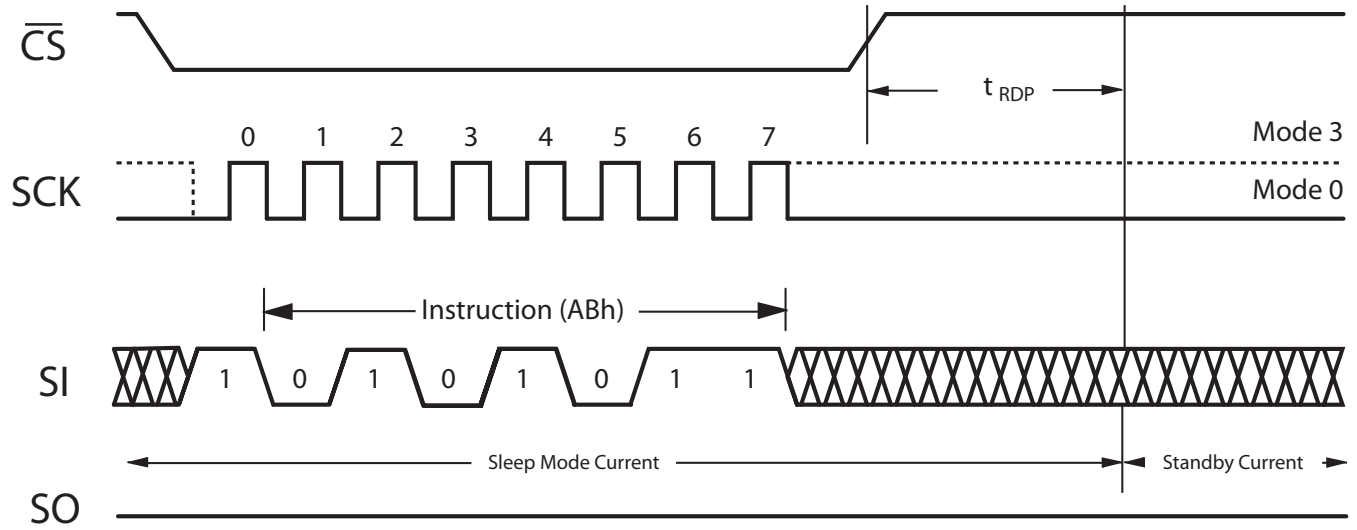

3. ELECTRICAL SPECIFICATIONS

Absolute Maximum Ratings

This device contains circuitry to protect the inputs against damage caused by high static voltages or electric fields; however, it is advised that normal precautions be taken to avoid application of any voltage greater than maximum rated voltages to these high-impedance (Hi-Z) circuits.

The device also contains protection against external magnetic fields. Precautions should be taken to avoid application of any magnetic field more intense than the field intensity specified in the maximum ratings.

Table 3.1 Absolute Maximum Ratings [1]

Symbol	Parameter	Conditions	Value	Unit
V_{DD}	Supply voltage [2]	All	-0.5 to 4.0	V
V_{IN}	Voltage on any pin [2]	All	-0.5 to V_{DD} + 0.5	V
I_{OUT}	Output current per pin	All	±20	mA
P_D	Package power dissipation [3]	All	0.600	W
T_{BIAS}	Temperature under bias	Industrial	-45 to 95	°C
		AEC-Q100 Grade 3	-45 to 95	°C
		AEC-Q100 Grade 1	-45 to 135	°C
T_{stg}	Storage Temperature	All	-55 to 150	°C
T_{Lead}	Lead temperature during solder (3 minute max)	All	260	°C
H_{max_write}	Maximum magnetic field (Write)	During Write	12,000	A/m
H_{max_read}	Maximum magnetic field (Read or Standby)	During Read or Standby	12,000	A/m

[1] Permanent device damage may occur if absolute maximum ratings are exceeded. Functional operation should be restricted to recommended operating conditions. Exposure to excessive voltages or magnetic fields could affect device reliability.

[2] All voltages are referenced to V_{SS}. The DC value of V_{IN} must not exceed actual applied V_{DD} by more than 0.5V. The AC value of V_{IN} must not exceed applied V_{DD} by more than 2V for 10ns with I_{IN} limited to less than 20mA.

[3] Power dissipation capability depends on package characteristics and use environment.

Copyright © 2018 Everspin Technologies, Inc.

Table 3.2 Operating Conditions

Symbol	Parameter	Grade	Min	Typical	Max	Unit
V_{DD}	Power supply voltage	Industrial	2.7	-	3.6	V
		AEC-Q100 Grade 3	2.7	-	3.6	
		AEC-Q100 Grade1	3.0	-	3.6	V
V_{IH}	Input high voltage	All	2.2	-	V_{DD} + 0.3	V
V_{IL}	Input low voltage	All	-0.5	-	0.8	V
T_A	Temperature under bias	Industrial	-40	-	85	°C
		AEC-Q100 Grade 3	-40	-	85	°C
		AEC-Q100 Grade 1 [1]	-40	-	125	°C

Note 1: AEC-Q100 Grade 1 temperature profile assumes 10 percent duty cycle at maximum temperature (2 years out of 20-year life.)

Table 3.3 DC Characteristics

Symbol	Parameter	Conditions	Min	Typical	Max	Unit
I_{LI}	Input leakage current	All	-	-	±1	µA
I_{LO}	Output leakage current	All	-	-	±1	µA
V_{OL}	Output low voltage	I_{OL} = +4 mA	-	-	0.4	V
		I_{OL} = +100 µA	-	-	V_{SS} + 0.2v	V
V_{OH}	Output high voltage	I_{OH} = -4 mA	2.4	-	-	V
		I_{OH} = -100 µA	V_{DD} - 0.2	-	-	V

Table 3.4 Power Supply Characteristics

Symbol	Parameter	Conditions	Typical	Max	Unit
I_{DDR}	Active Read Current	@ 1 MHz	2.5	3	mA
		@ 40 MHz	6	10	mA
I_{DDW}	Active Write Current	@ 1 MHz	8	13	mA
		@ 40 MHz	23	27	mA
I_{SB}	Standby Current	$\overline{CS}$ High [1]	90	115	µA
I_{ZZ}	Standby Sleep Mode Current	$\overline{CS}$ High	7	30	µA

[1] I_{SB} current is specified with $\overline{CS}$ high and the SPI bus inactive.

4. TIMING SPECIFICATIONS

Table 4.1 Capacitance[1]

Symbol	Parameter	Typical	Max	Unit
C_{In}	Control input capacitance	-	6	pF
$C_{I/O}$	Input/Output capacitance	-	8	pF

[1] f = 1.0 MHz, dV = 3.0 V, T_A = 25 °C, periodically sampled rather than 100% tested.

Table 4.2 AC Measurement Conditions

Parameter	Value	Unit
Logic input timing measurement reference level	1.5	V
Logic output timing measurement reference level	1.5	V
Logic input pulse levels	0 or 3.0	V
Input rise/fall time	2	ns
Output load for low and high impedance parameters	See Figure 4.1	
Output load for all other timing parameters	See Figure 4.2	

Figure 4.1 Output Load for Impedance Parameter Measurements

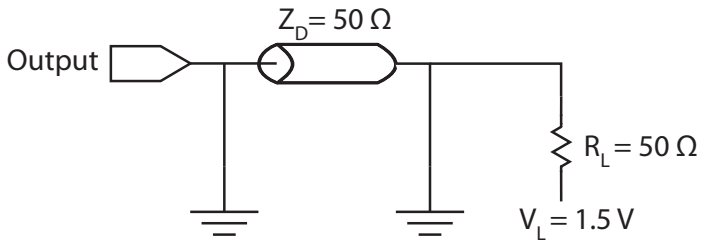

Figure 4.2 Output Load for all Other Parameter Measurements

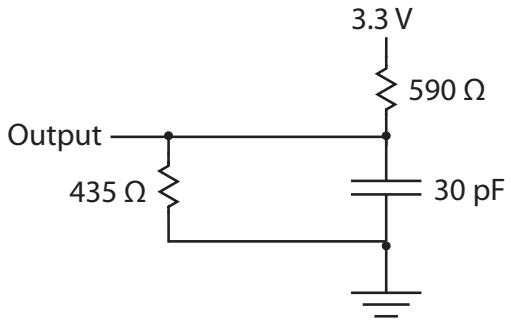

TIMING SPECIFICATIONS

Power-Up Timing

The MR25H128A is not accessible for a start-up time, t_{PU} = 400 µs after power up. Users must wait this time from the time when V_{DD} (min) is reached until the first $\overline{CS}$ low to allow internal voltage references to become stable. The $\overline{CS}$ signal should be pulled up to V_{DD} so that the signal tracks the power supply during power-up sequence.

Table 4.3 Power-Up

Symbol	Parameter	Min	Typical	Max	Unit
V_{WI}	Write Inhibit Voltage	2.2	-	2.7	V
t_{PU}	Startup Time	400	-	-	µs

Figure 4.3 Power-Up Timing

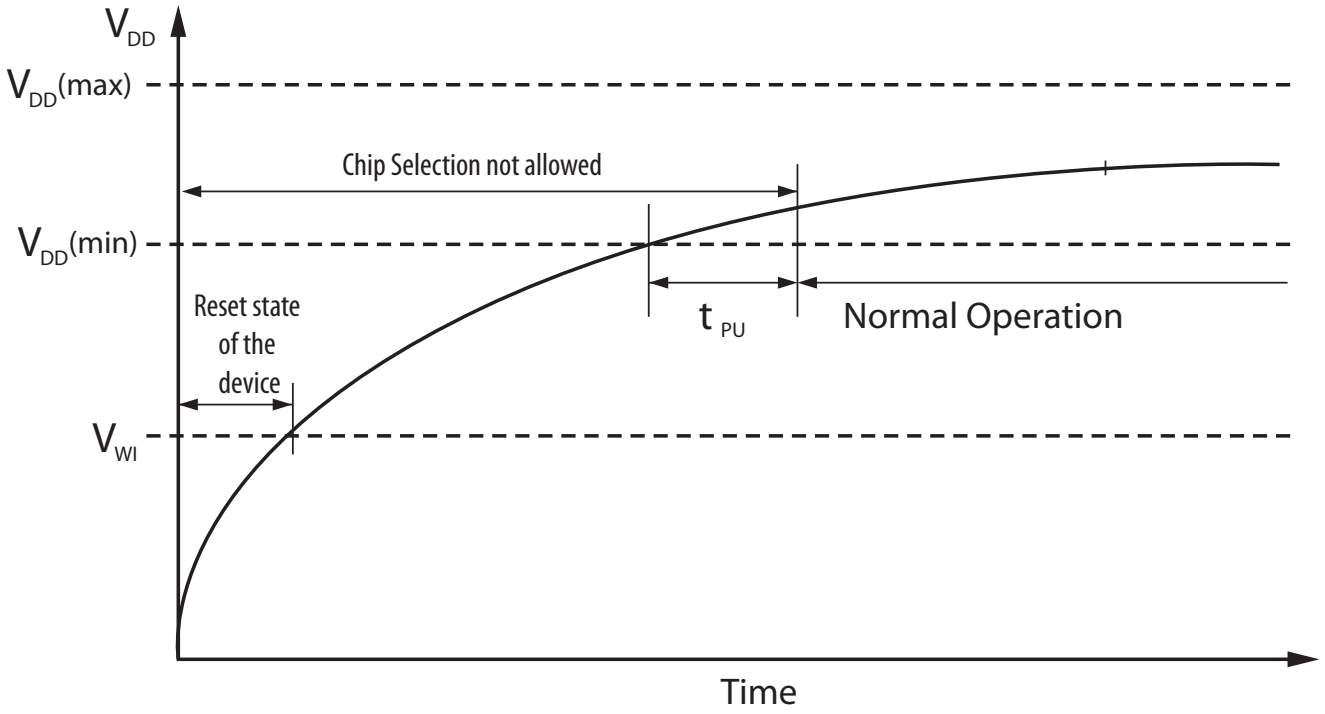

TIMING SPECIFICATIONS

Synchronous Data Timing

Table 4.4 AC Timing Parameters

Over the Operating Temperature Range and C_L = 30 pF						
Symbol	**Parameter**			**Min**	**Max**	**Unit**
f_{SCK}	SCK Clock Frequency			0	40	MHz
t_{RI}	Input Rise Time			-	50	ns
t_{RF}	Input Fall Time			-	50	ns
t_{WH}	SCK High Time			11	-	ns
t_{WL}	SCK Low Time			11	-	ns
Synchronous Data Timing (See figure 4.4)						
t_{CS}	$\overline{CS}$ High Time			40	-	ns
t_{CSS}	$\overline{CS}$ Setup Time			10	-	ns
t_{CSH}	$\overline{CS}$ Hold Time			10	-	ns
t_{SU}	Data In Setup Time			5	-	ns
t_H	Data In Hold Time			5	-	ns
t_V	Output Valid	Industrial Grade	V_{DD} = 2.7 to 3.6v.	0	10	ns
			V_{DD} = 3.0 to 3.6v.	0	9	ns
		AEC Q-100 Grade 3	V_{DD} = 2.7 to 3.6v.	0	10	ns
			V_{DD} = 3.0 to 3.6v.	0	9	ns
		AEC Q-100 Grade 1	V_{DD} = 3.0 to 3.6v.	0	10	ns

Table continues next page.

Table 4.4 (Cont'd) AC Timing Parameters

Symbol	Parameter	Min	Max	Unit
t_{HO}	Output Hold Time	0	-	ns
$\overline{HOLD}$ Timing (See figure 4.5)				
t_{HD}	$\overline{HOLD}$ Setup Time	10	-	ns
t_{CD}	$\overline{HOLD}$ Hold Time	10	-	ns
t_{LZ}	$\overline{HOLD}$ to Output Low Impedance	-	20	ns
t_{HZ}	$\overline{HOLD}$ to Output High Impedance	-	20	ns
Other Timing Specifications				
t_{WPS}	$\overline{WP}$ Setup To $\overline{CS}$ Low	5	-	ns
t_{WPH}	$\overline{WP}$ Hold From $\overline{CS}$ High	5	-	ns
t_{DP}	Sleep Mode Entry Time	3	-	µs
t_{RDP}	Sleep Mode Exit Time	400	-	µs
t_{DIS}	Output Disable Time	12	-	ns

Copyright © 2018 Everspin Technologies, Inc.

Figure 4.4 Synchronous Data Timing

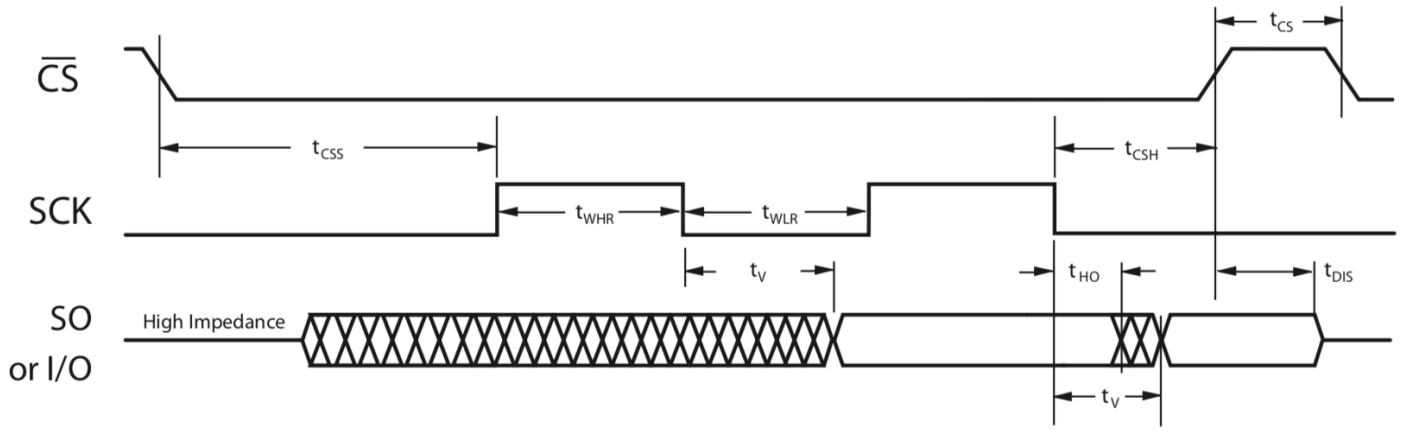

Figure 4.5 $\overline{\text{HOLD}}$ Timing

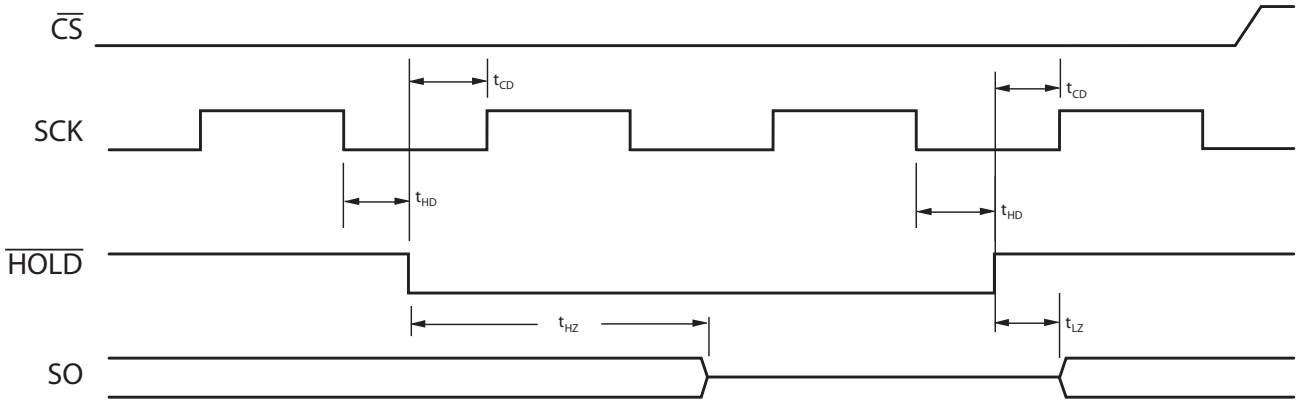

5. ORDERING INFORMATION

Figure 5.1 Product Part Number Decoder Table

		Memory	Speed	Voltage	Density	Revision	Temp	Package	Ship	Grade
Example Ordering Part Number		MR	25	H	128	A	P	DF	R	ES
Everspin MRAM	MR									
40 MHz	25									
3.0v. Vdd	H									
128 Kb	128									
Revision A	A									
Industrial -40 to 85°C	C									
AEC-Q100 Grade 3 -40 to 85°C	P									
AEC-Q100 Grade 1 -40 to 125°C	M									
8-pin DFN Small Flag	DF									
Tray	Blank									
Tape and Reel	R									
Mass Production	Blank									
Customer Samples	CS									
Engineering Samples	ES									

Table 5.1 Ordering Part Numbers

Grade	Temperature	Package	Shipping Container	Order Part Number
Industrial	-40 to +85 C	8-DFN Small Flag	Trays	MR25H128ACDF
			Tape and Reel	MR25H128ACDFR
AEC-Q100 Grade 3	-40 to +85 C	8-DFN Small Flag	Trays	MR25H128APDF
			Tape and Reel	MR25H128APDFR
AEC-Q100 Grade 1	-40 to +125 C	8-DFN Small Flag	Trays	MR25H128AMDF
			Tape and Reel	MR25H128AMDFR

6. MECHANICAL DRAWINGS

Figure 6.1 DFN Small Flag Package

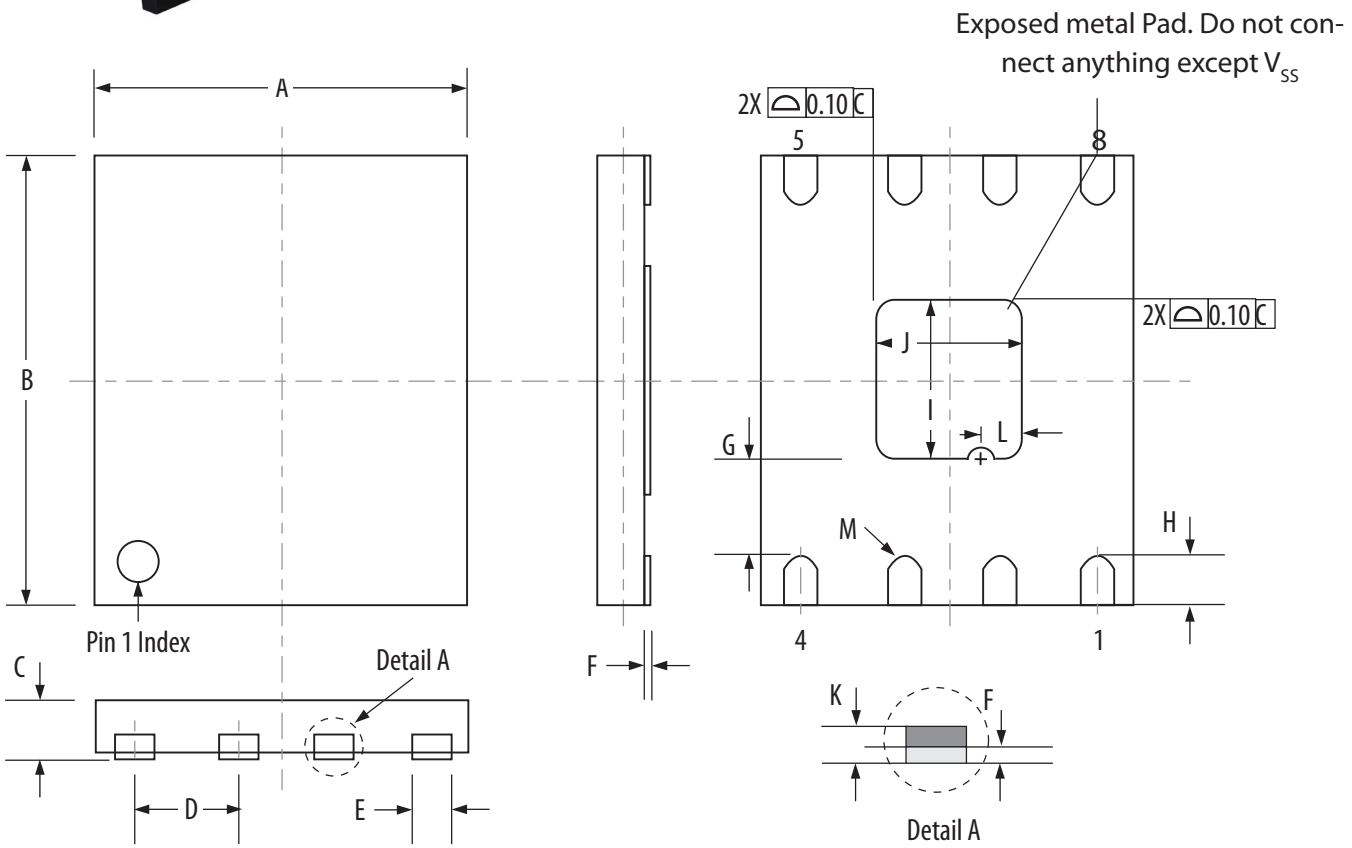

Dimension	A	B	C	D	E	F	G	H	I	J	K	L	M
Max	5.10	6.10	0.90	-	0.45	0.05	1.54	0.70	2.10	2.10	0.210	-	-
Nominal	5.00	6.00	0.85	1.27 BSC	0.40	-	1.40	0.60	2.00	2.00	0.200	C0.45	R0.20
Min	4.90	5.90	0.80	-	0.35	0.00	1.26	0.50	1.90	1.90	0.190	-	-

NOTE:

1. All dimensions are in mm. Angles in degrees.
2. Coplanarity applies to the exposed pad as well as the terminals. Coplanarity shall be within 0.08 mm.
3. Refer to JEDEC MO-229-E

Copyright © 2018 Everspin Technologies, Inc.

7. REVISION HISTORY

Revision	Date	Description of Change
0.1	June 1, 2015	First Draft
0.2	September 29, 2015	Corrected address range and timing diagrams for READ and WRITE to Address bits 0-13. Added Grade 3 parameters to Table 4.4 and reformatted the Table.
0.3	November 2, 2015	Revised Part Number Decoder Table.
1.0	October 1, 2016	Production release. Removed all Preliminary status statements and indications. Added nominal values to DFN package outline dimensions table.
1.1	February 1, 2017	Added ^{t}HO and ^{t}V relationship to Synchronous Data Timing
1.2	March 23, 2018	Updated the Contact Us table

How to Reach Us:
Home Page:
www.everspin.com

World Wide Information Request
WW Headquarters - Chandler, AZ
5670 W. Chandler Blvd., Suite 100
Chandler, Arizona 85226
Tel: +1-877-480-MRAM (6726)
Local Tel: +1-480-347-1111
Fax: +1-480-347-1175
support@everspin.com
orders@everspin.com
sales@everspin.com

Europe, Middle East and Africa
Everspin Europe Support
support.europe@everspin.com

Japan
Everspin Japan Support
support.japan@everspin.com

Asia Pacific
Everspin Asia Support
support.asia@everspin.com

Filename:
EST02895_MR25H128A_Datasheet_Rev1.2032318

Everspin Technologies, Inc.

Information in this document is provided solely to enable system and software implementers to use Everspin Technologies products. There are no express or implied licenses granted hereunder to design or fabricate any integrated circuit or circuits based on the information in this document. Everspin Technologies reserves the right to make changes without further notice to any products herein. Everspin makes no warranty, representation or guarantee regarding the suitability of its products for any particular purpose, nor does Everspin Technologies assume any liability arising out of the application or use of any product or circuit, and specifically disclaims any and all liability, including without limitation consequential or incidental damages. "Typical" parameters, which may be provided in Everspin Technologies data sheets and/or specifications can and do vary in different applications and actual performance may vary over time. All operating parameters including "Typicals" must be validated for each customer application by customer's technical experts. Everspin Technologies does not convey any license under its patent rights nor the rights of others. Everspin Technologies products are not designed, intended, or authorized for use as components in systems intended for surgical implant into the body, or other applications intended to support or sustain life, or for any other application in which the failure of the Everspin Technologies product could create a situation where personal injury or death may occur. Should Buyer purchase or use Everspin Technologies products for any such unintended or unauthorized application, Buyer shall indemnify and hold Everspin Technologies and its officers, employees, subsidiaries, affiliates, and distributors harmless against all claims, costs, damages, and expenses, and reasonable attorney fees arising out of, directly or indirectly, any claim of personal injury or death associated with such unintended or unauthorized use, even if such claim alleges that Everspin Technologies was negligent regarding the design or manufacture of the part. Everspin™ and the Everspin logo are trademarks of Everspin Technologies, Inc. All other product or service names are the property of their respective owners.

Copyright © Everspin Technologies, Inc. 2018