THIS DRAWING IS UNPUBLISHED. RELEASED FOR PUBLICATION -,- .
© COPYRIGHT - By - ALL RIGHTS RESERVED.

REVISIONS

P	LTR	DESCRIPTION	DATE	DWN	APVD
	B3	REVISED PER ECR-16-007444	28MAY2016	NK	SC

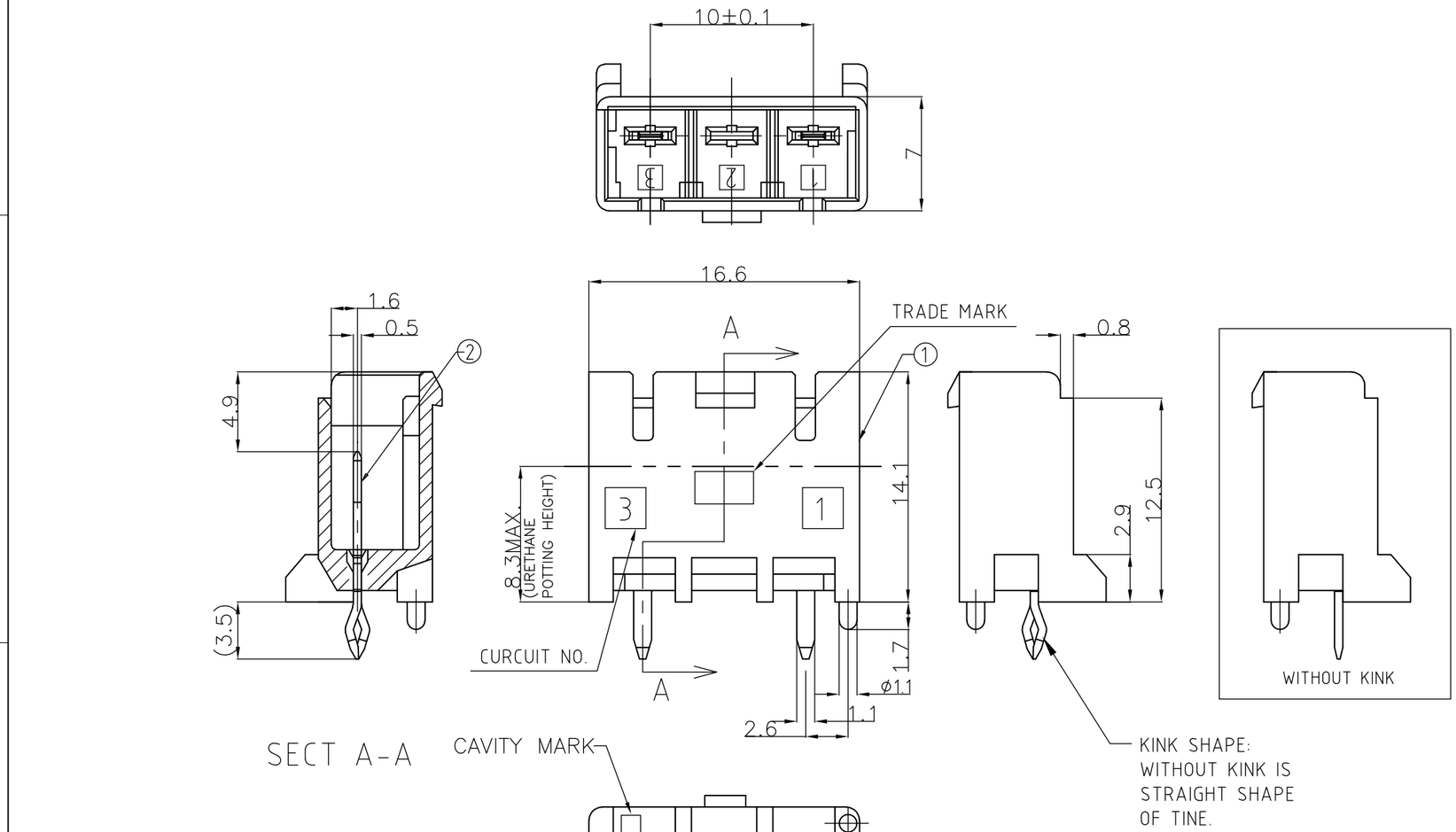

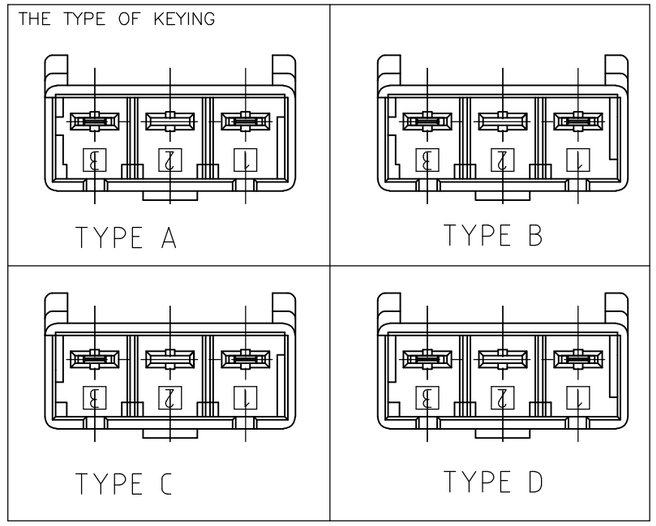

NO.	NAME	MATERIAL
2	HEADER HOSING	6/6 NYLON GRASS FILLED
1	TAB	COPPER ALLOY TIN PLATED

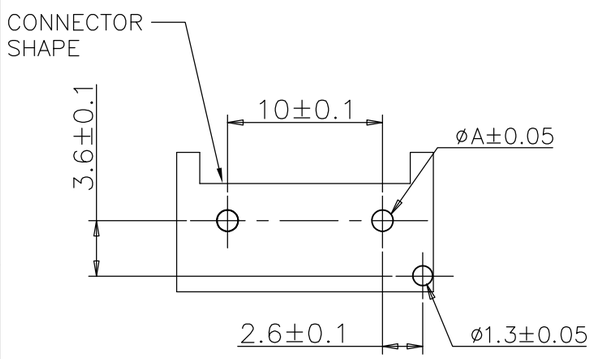

	PUNCHING	1.25
	DRILLING	1.4
		DIM A

1 RECOMMENDED PCB HOLES

1 RECOMMENDED P.C.B LAY OUT.

2 APPLICABLE P.C.B. THICKNESS:1.6.

3 MATING CONN. P/N
PLUG HOUSING :SEE TABLE.

4 PARTS MEET IEC 60335-1 (GWT GLOW WIRE TEST 750 DEGREE SPEC).

5 NYLON 66, GWT, V-0.

	MATING CONN. P/N 3	WITH/WITHOUT KINK	TYPE OF KEYING	Color	Pos	PART NO.
5	3-1376389-4	WITH KINK	TYPE D	YELLOW	3Pos	3-1376421-4
5	2-1376389-3	WITH KINK	TYPE C	BLUE	3Pos	2-1376421-3
5	1-1376389-2	WITH KINK	TYPE B	RED	3Pos	1-1376421-2
5	1376389-1	WITH KINK	TYPE A	NATURAL	3Pos	1376421-1

THIS DRAWING IS A CONTROLLED DOCUMENT.

DIMENSIONS: mm

TOLERANCES UNLESS OTHERWISE SPECIFIED:
0 PLC ± 0.2
1 PLC ±
2 PLC ±
3 PLC ±
4 PLC ±
ANGLES ± 1°

MATERIAL: SEE TABLE

FINISH: SEE TABLE

DWN A.OISHI 28AUG'00
CHK Y.KASHIWA 28AUG'00
APVD Y.KASHIWA 28AUG'00
PRODUCT SPEC 108-5699
APPLICATION SPEC 114-5292
WEIGHT

TE Connectivity

NAME
5.0 POWER KEY CONNECTOR
10MM PITCH 2P HEADER ASSEMBLY

SIZE	CAGE CODE	DRAWING NO	RESTRICTED TO
A3	00779	C-1376421	—

CUSTOMER DRAWING | SCALE 3:1 | SHEET 1 OF 1 | REV B3