THIS DRAWING IS UNPUBLISHED. RELEASED FOR PUBLICATION 20
© COPYRIGHT 20 BY - ALL RIGHTS RESERVED.

REVISIONS

P	LTR	DESCRIPTION	DATE	DWN	APVD
	A	INITIAL	03JUN2015	DW	CW
	B	ECR-20-014876	22OCT2020	WQR	CW
	B1	ECR-21-108894	04AUG2021	WQR	CW

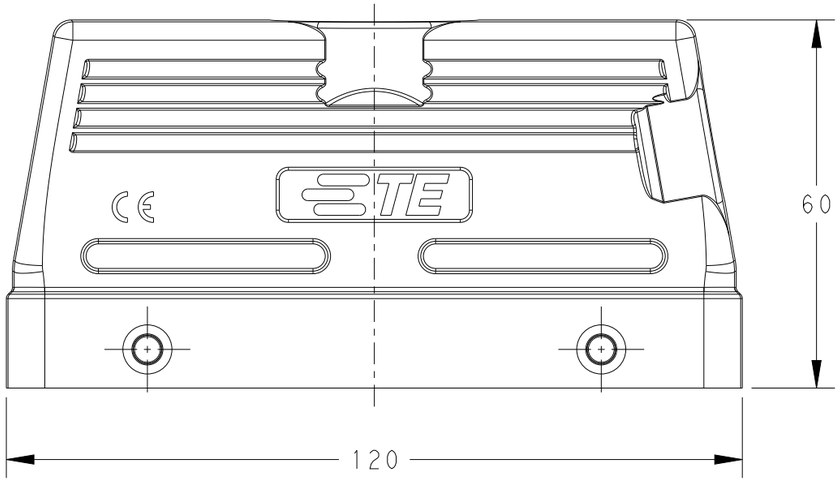

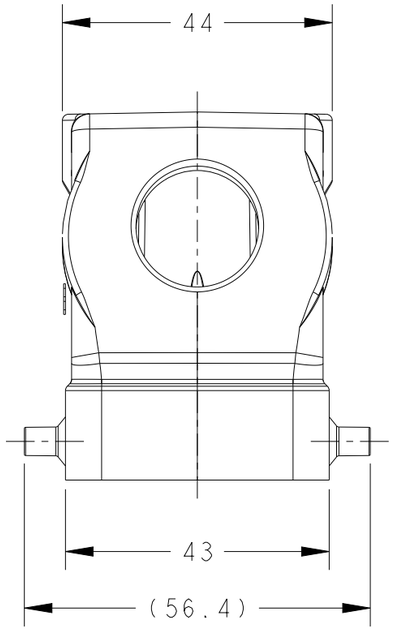

NOTES:
1. TECHNICAL CHARACTERISTICS:
   HOOD MATERIAL: DIE CAST ALUMINIUM ALLOY
   SURFACE: POWDER COATED, GREY
   DEGREE OF PROTECTION: IP65 (MATED)

注释：
1. 技术参数：
   上壳材料： 铝合金
   表面处理： 粉末涂层， 灰色
   防护等级： IP65(配合)

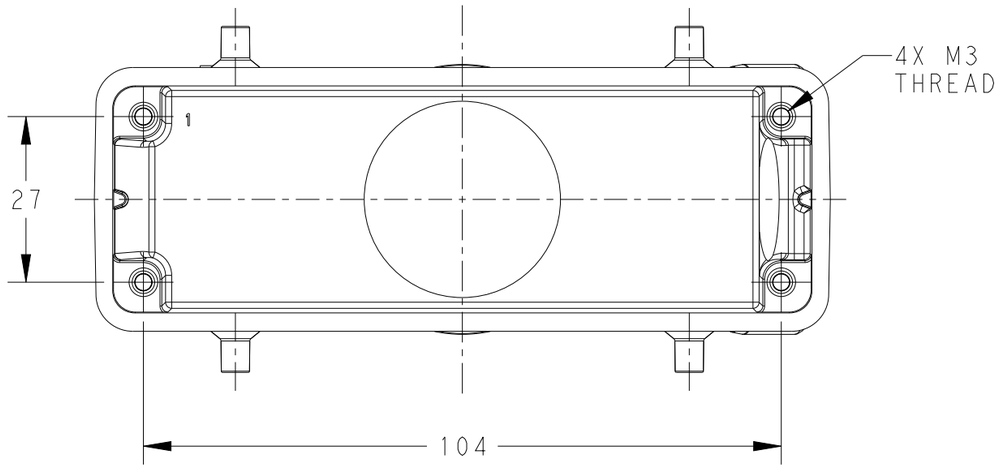

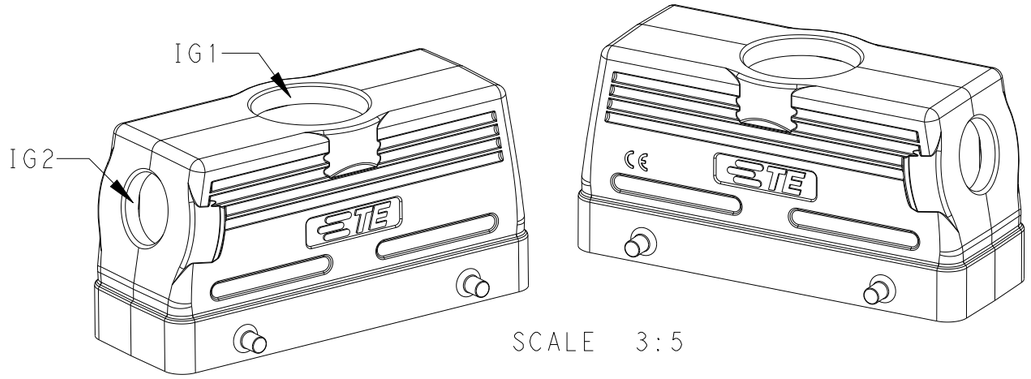

SCALE 3:5

PART NUMBER	DESCRIPTION	IG1	IG2
T1200243220-000	H24B-TG-M32/TS-M20	M32	M20

THIS DRAWING IS A CONTROLLED DOCUMENT.

DIMENSIONS: mm

TOLERANCES UNLESS OTHERWISE SPECIFIED:
0 PLC ±-
1 PLC ±-
2 PLC ±-
3 PLC ±-
4 PLC ±-
ANGLES ±-

MATERIAL - -

FINISH - -

DWN David Wang 03JUN2015
CHK Chris Wang 03JUN2015
APVD Xiang Xu 03JUN2015
PRODUCT SPEC 108-137013
APPLICATION SPEC 114-137013
WEIGHT -

TE Connectivity

NAME H24B-TG-M32/TS-M20

SIZE	CAGE CODE	DRAWING NO	RESTRICTED TO
A3	00779	C-T1200243220000	-

Customer Drawing | SCALE 1:1 | SHEET 1 OF 1 | REV B1

1470-19 (3/13)