THIS DRAWING IS UNPUBLISHED. RELEASED FOR PUBLICATION 20
© COPYRIGHT 20 BY - ALL RIGHTS RESERVED.

REVISIONS

P	LTR	DESCRIPTION	DATE	DWN	APVD
	C1	REVISED PER ECR-17-017609	04DEC2017	JB	DZ
	C2	ECO-19-006934	13MAY2019	AP	WS

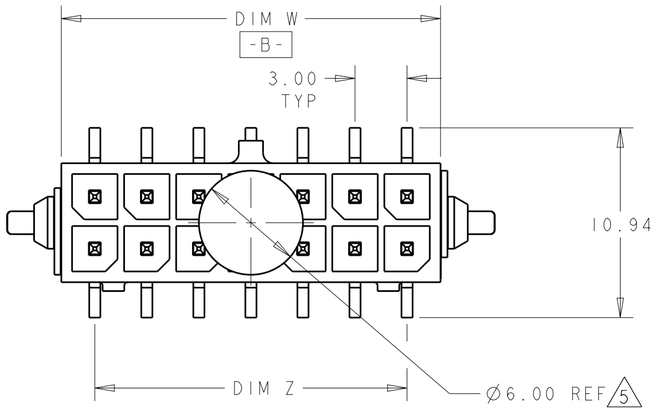

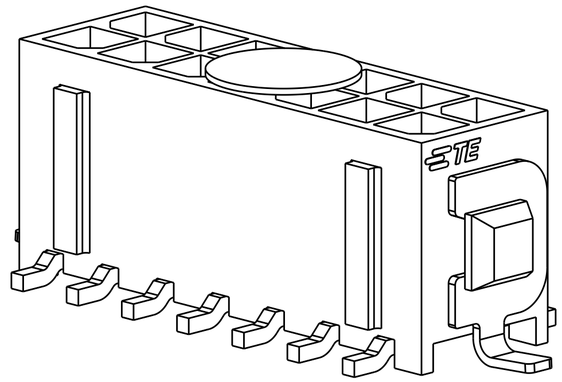

SCALE 6:1

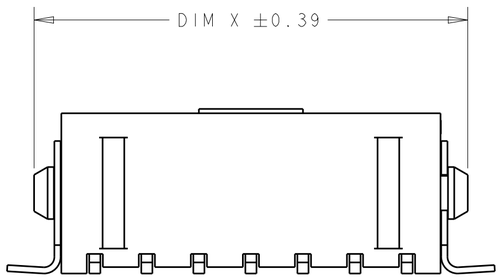

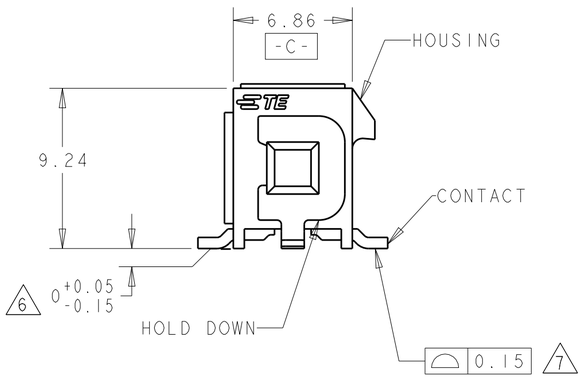

1 MATERIAL:
CONTACTS - BRASS.
HOUSING - UL 94V-0 RATED HIGH TEMP NYLON, COLOR; BLACK.
HOLD DOWNS - PHOSPHOR BRONZE.

2 FINISH:
CONTACTS - 2.54µm MINIMUM MATTE TIN OVER 1.27µm MINIMUM NICKEL.
HOLD DOWNS - 2.54µm MATTE TIN.

3. SPECIAL PACKAGING FOR IEC 286-3 REQUIREMENT. PARTS ORIENTED TAPE 180° DIFFERENT IN TAPE THAN STANDARD PART NUMBER 794636.

4 RECOMMENDED PC BOARD THICKNESS OF 1.57.

5 KAPTON VACUUM PICK UP BUTTON.

6 DIMENSION APPLIES TO SOLDERTAIL SURFACES AND STANDOFF SURFACES.

7 ALL SOLDERTAILS AND HOLD DOWNS.

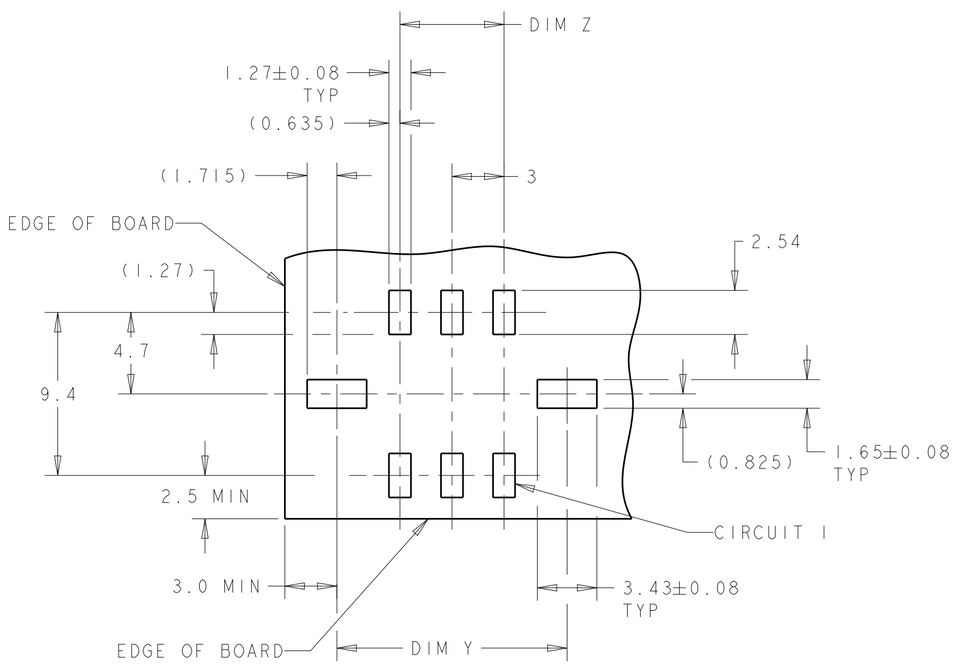

RECOMMENDED PCB LAYOUT 4
(COMPONENT SIDE)

2	30.86	34.27	27.00	34.00	20	2-1586842-0
	24.86	28.27	21.00	28.00	16	1-1586842-6
	18.86	22.27	15.00	22.00	12	1-1586842-2
	12.86	16.27	9.00	16.00	8	1586842-8
	9.86	13.27	6.00	13.00	6	1586842-6
	6.86	10.27	3.00	10.00	4	1586842-4
	3.86	7.27	-	7.00	2	1586842-2
FINISH	DIM W	DIM Y	DIM Z	DIM X	NO. OF POSN.	ASSEMBLY

THIS DRAWING IS A CONTROLLED DOCUMENT.

DIMENSIONS: mm

TOLERANCES UNLESS OTHERWISE SPECIFIED:
0 PLC ±-
1 PLC ±
2 PLC ±0.13
3 PLC ±
4 PLC ±
ANGLES ±-

MATERIAL 1

FINISH SEE TABLE

DWN K. WHITAKER 05NOV2007
CHK C. JONES 05NOV2007
APVD C. JONES 05NOV2007
PRODUCT SPEC 108-1836
APPLICATION SPEC 114-13000
WEIGHT

TE Connectivity

NAME HEADER ASSY, VERTICAL, SURFACE MOUNT, SURF MNT HOLDDOWN, TIN, DUAL ROW, SPCL PKGING, MICRO MATE-N-LOK (TM)

SIZE A2 | CAGE CODE - | DRAWING NO C-1586842 | RESTRICTED TO -

CUSTOMER DRAWING | SCALE 4:1 | SHEET 1 OF 1 | REV C2

1586842

1471-9 (3/13)