© – TE Connectivity. All Rights Reserved.

REVISIONS					
P	LTR	DESCRIPTION	DATE	DWN	APVD
	J1	REVISED PER ECN-23-220565	06JUL2023	RK	MF

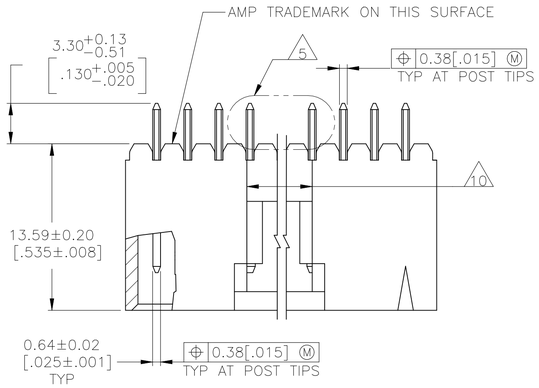

DETAIL Z
POST DETAIL TYP
2 POST MINIMUM

1. 0.00038[.000015] GOLD IN THE CONTACT AREA, 0.00254–0.00508[.000100–.000200] MATTE TIN–LEAD ON THE SOLDER TAIL, ALL OVER 0.00127[.000050] NICKEL
2. POINT OF MEASUREMENT FOR PLATING THICKNESS
3. THE NOTED DIMENSIONS APPLY FROM THE BASIC DIMENSION LINE (NOT THE POST CENTERLINE) TO THE SURFACE INDICATED
4. ONE POLARIZATION SLOT FOR 2 POSITION ASSEMBLY ONLY.
5. HOLD DOWN UNTIL SOLDERED, CONFIGURATION ACCEPTS 0.69–2.03[.027–.080] THICK PRINTED CIRCUIT BOARD (SEE DETAIL Z)
6. DIMENSIONS NOTED ARE FOR SOLDER STENCIL LAYOUT FOR USE WITH 1.57±0.20[.062±.008] THICK PRINTED CIRCUIT BOARDS.
7. PARTS ARE PACKAGED IN GANG OF TUBES
8. 0.00038[.000015] GOLD IN THE CONTACT AREA, 0.00254–0.00508[.000100–.000200] MATTE TIN ON THE SOLDER TAIL, ALL OVER 0.00127[.000050] NICKEL
9. OBSOLETE PARTS: OBSOLETE CIS STREAMLINING PER D.RENAUD/D.SINISI
10. 0.25 [.010] RECESS PERMISSIBLE IN THIS AREA FOR MOLD SHUT OFF

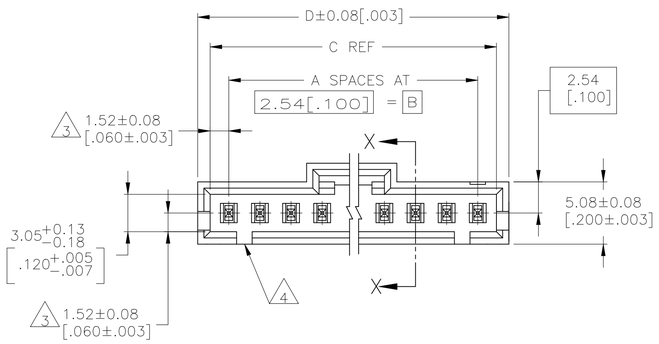

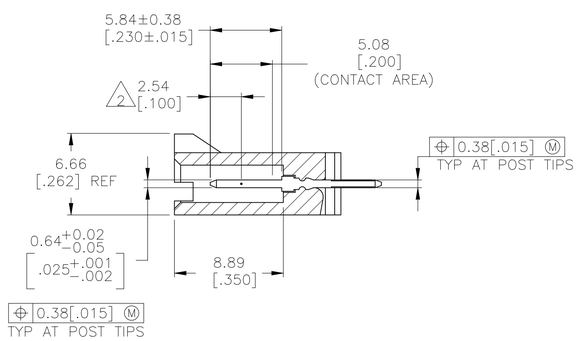

SECTION X–X

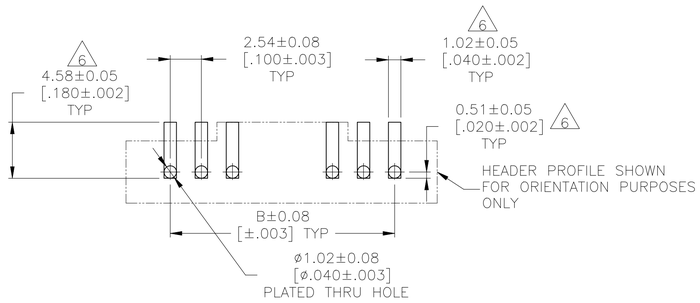

RECOMMENDED PC BOARD MOUNTING DIMENSIONS
RECOMMENDED STENCIL THICKNESS = 0.25[.010]

		PLATING	D	C	B	A	NO. OF POSN	PART NUMBER
		8	65.91 [2.595]	64.01 [2.520]	60.96 [2.400]	24	25	7–104909–4
		8	63.37 [2.495]	61.47 [2.420]	58.42 [2.300]	23	24	7–104909–3
		8	60.83 [2.395]	58.93 [2.320]	55.88 [2.200]	22	23	7–104909–2
		8	58.29 [2.295]	56.39 [2.220]	53.34 [2.100]	21	22	7–104909–1
		8	55.75 [2.195]	53.85 [2.120]	50.80 [2.000]	20	21	7–104909–0
		8	53.21 [2.095]	51.31 [2.020]	48.26 [1.900]	19	20	6–104909–9
		8	50.67 [1.995]	48.77 [1.920]	45.72 [1.800]	18	19	6–104909–8
		8	48.13 [1.895]	46.23 [1.820]	43.18 [1.700]	17	18	6–104909–7
		8	45.59 [1.795]	43.69 [1.720]	40.64 [1.600]	16	17	6–104909–6
		8	43.05 [1.695]	41.15 [1.620]	38.1 [1.500]	15	16	6–104909–5
		8	40.51 [1.595]	38.61 [1.520]	35.56 [1.400]	14	15	6–104909–4
		8	37.97 [1.495]	36.07 [1.420]	33.02 [1.300]	13	14	6–104909–3
		8	35.43 [1.395]	33.53 [1.320]	30.48 [1.200]	12	13	6–104909–2
	SUPERCEDED	1	65.91 [2.595]	64.01 [2.520]	60.96 [2.400]	24	25	~~2–104909–4~~
9	SUPERCEDED	1	63.37 [2.495]	61.47 [2.420]	58.42 [2.300]	23	24	~~2–104909–3~~
9	OBSOLETE	1	60.83 [2.395]	58.93 [2.320]	55.88 [2.200]	22	23	~~2–104909–2~~
	SUPERCEDED	1	58.29 [2.295]	56.39 [2.220]	53.34 [2.100]	21	22	~~2–104909–1~~
		1	55.75 [2.195]	53.85 [2.120]	50.80 [2.000]	20	21	~~2–104909–0~~
		1	53.21 [2.095]	51.31 [2.020]	48.26 [1.900]	19	20	~~1–104909–9~~
9		1	50.67 [1.995]	48.77 [1.920]	45.72 [1.800]	18	19	~~1–104909–8~~
		1	48.13 [1.895]	46.23 [1.820]	43.18 [1.700]	17	18	1–104909–7
	SUPERCEDED	1	45.59 [1.795]	43.69 [1.720]	40.64 [1.600]	16	17	~~1–104909–6~~
9		1	43.05 [1.695]	41.15 [1.620]	38.1 [1.500]	15	16	~~1–104909–5~~
		1	40.51 [1.595]	38.61 [1.520]	35.56 [1.400]	14	15	1–104909–4
9	SUPERCEDED	1	37.97 [1.495]	36.07 [1.420]	33.02 [1.300]	13	14	~~1–104909–3~~
		1	35.43 [1.395]	33.53 [1.320]	30.48 [1.200]	12	13	1–104909–2

THIS DRAWING IS A CONTROLLED DOCUMENT.

DIMENSIONS: mm [INCHES]

TOLERANCES UNLESS OTHERWISE SPECIFIED:
0 PLC ± –
1 PLC ± –
2 PLC ± 0.13[.005]
3 PLC ± –
4 PLC ± –
ANGLES ± –

MATERIAL: HOUSIG: LCP– COLOR: BLACK POSTS: BRASS

FINISH: SEE TABLE

DWN: E. BRANDBERG –
CHK: J. GESFORD 13–10–94
APVD: D. DUPLER 13–10–94

PRODUCT SPEC: —

APPLICATION SPEC: —

WEIGHT: 0.000000

CUSTOMER DRAWING

TE Connectivity

NAME: HEADER ASSY, AMPMODU MTE, VERTICAL SINGLE ROW, 2.54[.100] C/L, 0.64[.025] SQ POSTS, POLARIZED,WITH LATCHING & HOLD DOWN, HIGH TEMP

SIZE	CAGE CODE	DRAWING NO	RESTRICTED TO
A1	00779	C–104909	—

SCALE 4:1 | SHEET 1 OF 1 | REV J1

4805 (1/15)