THIS DRAWING IS UNPUBLISHED. RELEASED FOR PUBLICATION 20
© COPYRIGHT 20 BY - ALL RIGHTS RESERVED.

REVISIONS

P	LTR	DESCRIPTION	DATE	DWN	APVD
	D	REV PER ECI 14-012106	8-7-14	CT	DH

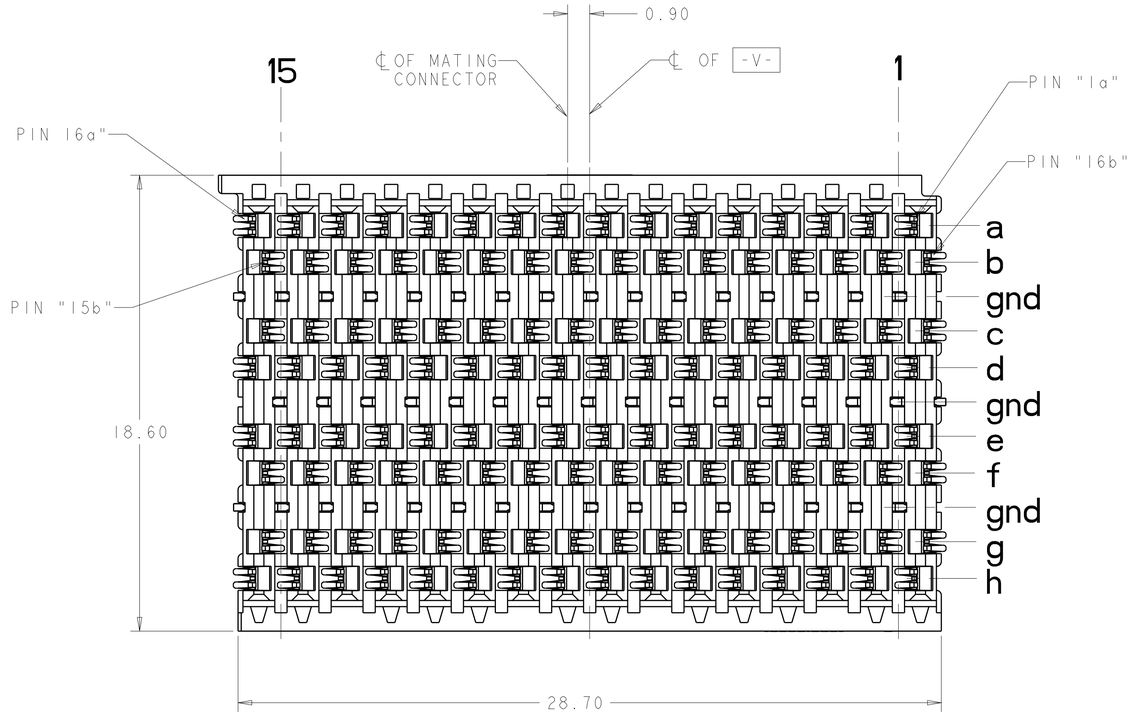

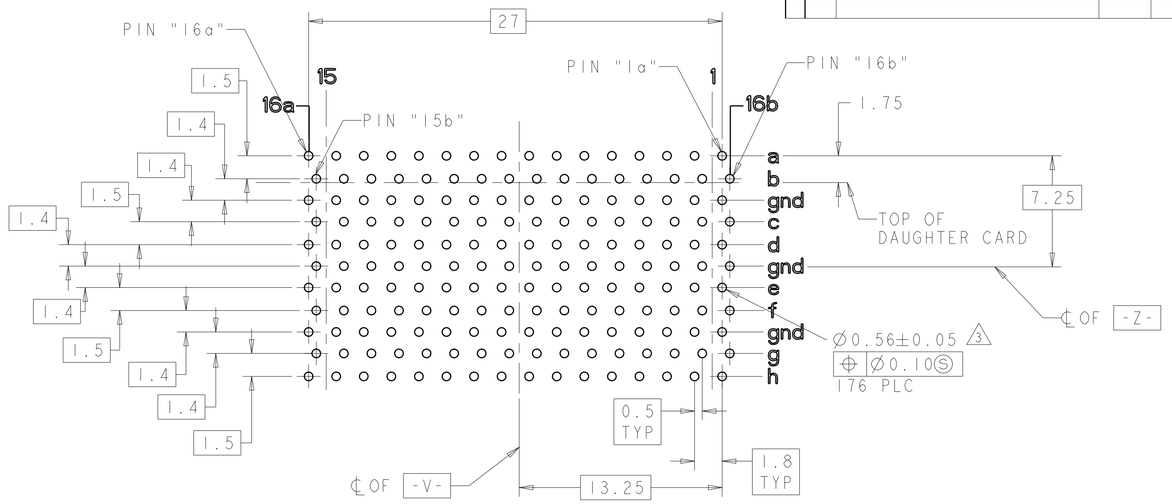

PC BOARD FOOTPRINT
VIEWED FROM CONNECTOR SIDE
SCALE 5:1

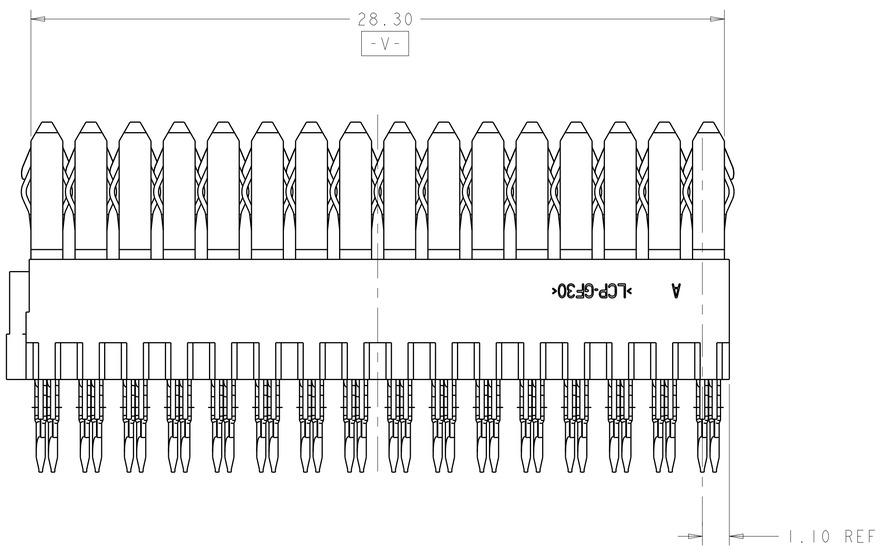

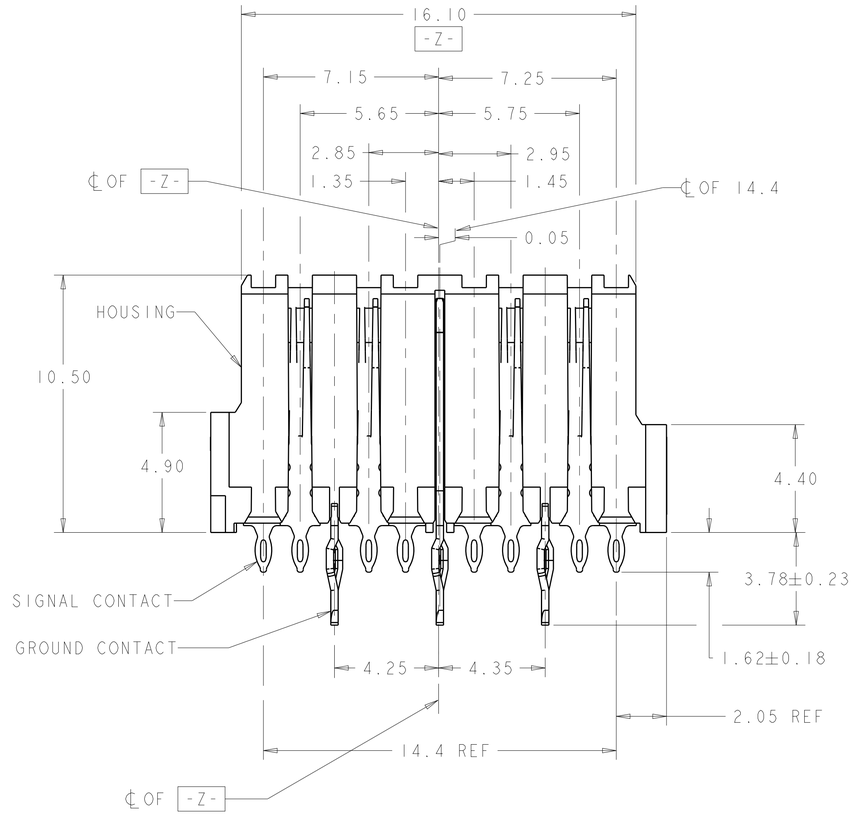

1. HOUSING: LCP, UL94V-0, BLACK.
   CONTACT: PHOSPHOR BRONZE.
2. 1.27µm GOLD PER ASTM B 488 IN CONTACT AREA, 1.27µm MIN TIN-LEAD ON PCB TAIL, OVER 3.81µm MIN NICKEL PER SAE AMS-QQ-N-290 OVER ALL.
3. PLATE THROUGH HOLES PER TE SPEC. 114-13056, FIGURE 4.
4. 1.27 µm GOLD PER ASTM B 488 IN CONTACT AREA , 1.27 µm MIN MATTE TIN PER ASTM B 545 ON PCB TAIL, OVER 3.81 µm MIN NICKEL PER SAE AMS-QQ-N-290 OVER ALL.

4	1410200-2
2 3	1410200-1
CONTACT TAIL/ HOLE FINISH	PART NO

THIS DRAWING IS A CONTROLLED DOCUMENT.

DIMENSIONS: mm

TOLERANCES UNLESS OTHERWISE SPECIFIED:
0 PLC ±-
1 PLC ±0.5
2 PLC ±0.13
3 PLC ±-
4 PLC ±-
ANGLES ±1°0'

MATERIAL 1
FINISH 2

DWN N. REESER 19OCT2001
CHK W. VAN SCYOC 19OCT2001
APVD D. DEFIBAUGH 19OCT2001
PRODUCT SPEC 108-2072
APPLICATION SPEC 114-13056
WEIGHT -

TE Connectivity

NAME VERTICAL RECEPTACLE ASSEMBLY, CENTER, FULL, 20.3mm, MultiGig RT-1 BACKPLANE CONNECTOR

SIZE	CAGE CODE	DRAWING NO	RESTRICTED TO
A1	-	C-1410200	-

CUSTOMER DRAWING | SCALE 8:1 | SHEET 1 OF 1 | REV C

4805 (3/13)