REV.	ECN NO.	DATE	SIGN	DESCRIPTION
B	LEN139004I	2007/10/03	Lu Di	Update Dimensions
C	LEN13B026I	2013/11/13	Sam	Modify Dimension

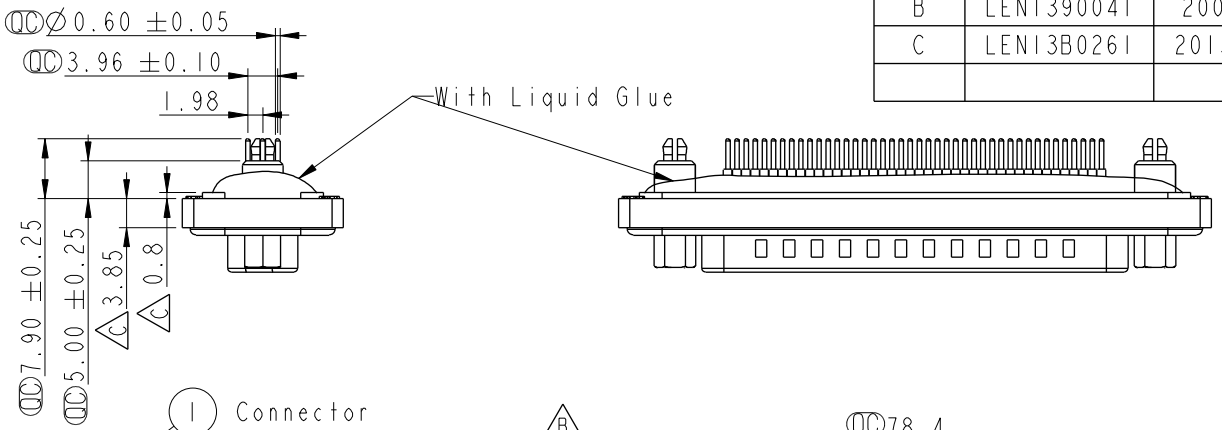

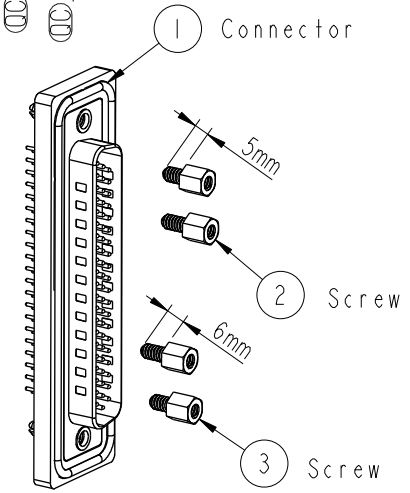

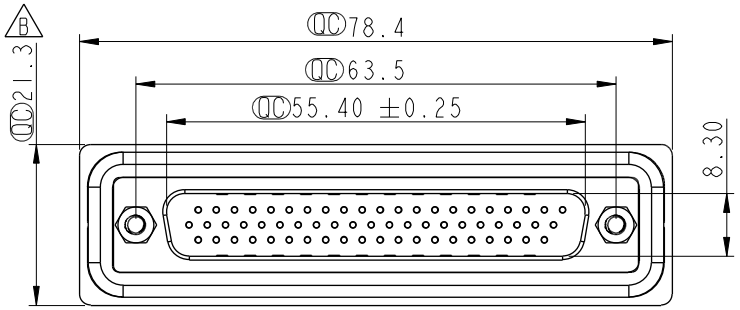

Panel Thickness
面 板 厚 度

Screw L=5.0 For Panel Thickness Under 1.2mm
適用板厚爲 1.2mm 以下

Screw L=6.0 For Panel Thickness Between 1.2~2.0mm
適用板厚爲1.2~2.0mm

ALTW
CONFIDENTIAL
2013-11-13
R&D DEPT.

ALTW
DCC. DEPT.
CONFIDENTIAL
2013.11.20
ISSUED

Note:
* QC Important Dimension.
* Waterproof Rate : IP67
* Do Mating Test After Glued
  點膠後，須作對插測試
* HD-SUB Conn. : Black Core,PBT
* Plastic Jacket : Black,Nylon+GF
* Male Pin : Copper Alloy , Gold Plated
* Ring : Light Blue,Silicone
* Screw : Copper Alloy,Nickel Plated, #4-40 UNC
* The 180° Board Lock Needs To Connect The Iron Shell
  180° 型支架需接鐵殼

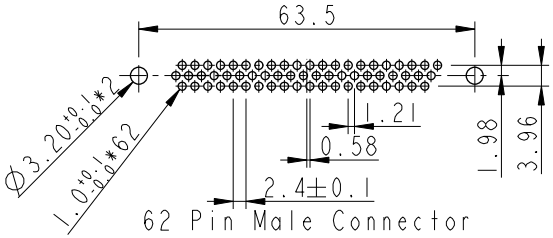

62 Pin Male Connector

Board Lock PCB-Thickness 1.6mm

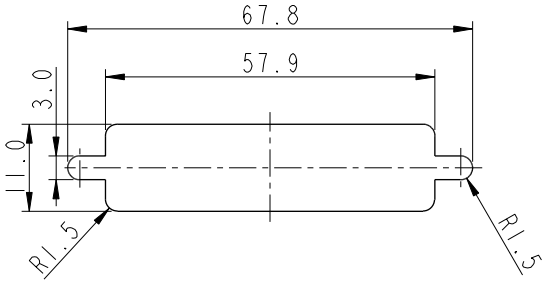

Recommended Panel Cut-Out
建 議 挖 孔 尺 寸

UNIT:mm	TITLE: HD-Sub Conn. 62 Pins PCB Type For Panel,PCB 180° Board Lock		ITEM NO: HDB-62PMMP-SA7001	DRAWN BY: SamChang	DATE: 2013-11-13
TOLERANCE .X ±0.25, .XX ±0.1, .XXX ±0.05, ANGLES ±1°	SCALE: 1:1	SIZE: A4	DWG NO: HDB-62PMMP-SA7001	CHECKED BY: Jeffrey	DATE: 2013-11-13
	REV.: C	WC-REV.: B.2	CUSTOMER: ALTW	APPROVED BY: Rita	DATE: 2013-11-13
	SHEET 1 OF 1	QC: Inspection item			

Amphenol LTW
安費諾亮泰企業股份有限公司

THIS DOCUMENT IS SUBJECT TO CHANGE WITHOUT NOTICE. IT IS CONFIDENTIAL AND A PROPERTY OF Amphenol LTW. DISCLOSURE TO THIRD PARTY HAS TO BE AUTHORIZED BY Amphenol LTW.