REV.	ECN NO.	DATE	SIGN	DESCRIPTION
B	C210309	2021/03/05	Ruru	B X7
C	C211126	2021/07/14	Ruru	C X1

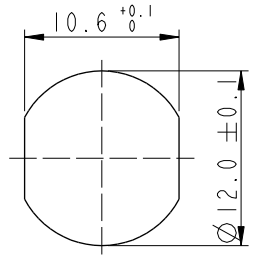

Recommended Panel Cut-Out

B MSAP-XXPMMR-SF8003

XX: No. Of Pin

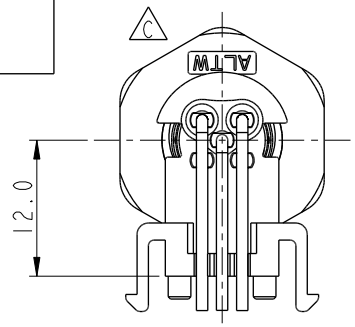

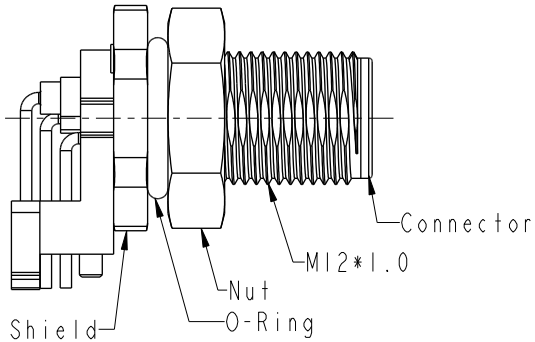

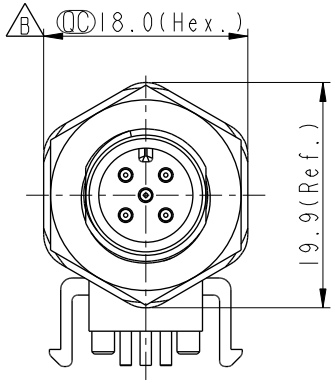

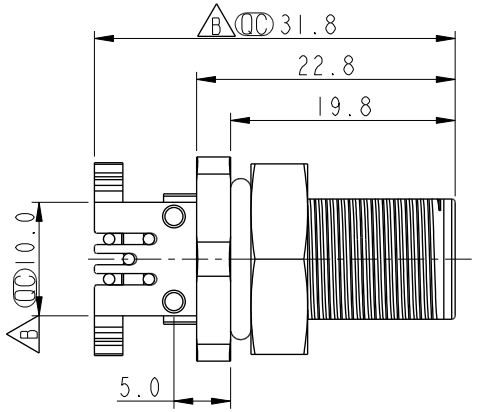

B Note:
* RoHS Compliant
* QC Important dimension
* Waterproof rate: IPX8, unmated 1m/24h
* Connector
  Housing: Thermoplastic, Black
  Pin: Copper alloy, Gold plated
* Shield: Thermoplastic, Black
* Nut: Thermoplastic, Black
* O-Ring: Rubber, Gray
* For panel thickness max: 4.0mm
* For pcb thickness max: 1.6mm
* Nut is packed separately in pe bag

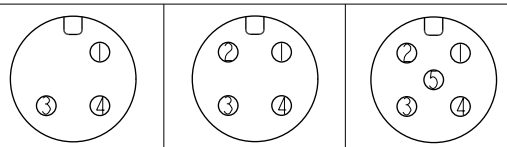

3P 4P 5P

Pin Assignment Front View

UNIT: mm

TOLERANCE
.X ±0.25
.XX ±0.1
.XXX ±0.05
ANGLES ±1°

TITLE: N SEN, M12 A -PLASTIC, SCREW RECEPTACLE, M, M, PCB R B

SCALE 3:2 | SIZE A4 | SHEET 1 OF 2

REV. C | WC-REV. A.2 | QC: Inspection item

Amphenol LTW
安費諾亮泰企業股份有限公司

ITEM NO	DRAWN BY: Yulong_wang	DATE: 2016-12-07
DWG NO: MSAP-XXPMMR-SF8003	CHECKED BY: Jinhai	DATE: 2016-12-07
CUSTOMER: ALTW	APPROVED BY: Jerry	DATE: 2016-12-07

W10814-03-[redacted]01A2

THIS DOCUMENT IS SUBJECT TO CHANGE WITHOUT NOTICE. IT IS CONFIDENTIAL AND A PROPERTY OF Amphenol LTW. DISCLOSURE TO THIRD PARTY HAS TO BE AUTHORIZED BY Amphenol LTW.

PCB Layout

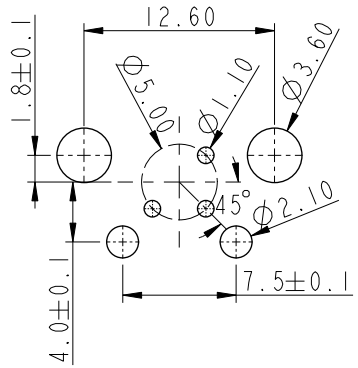

3P

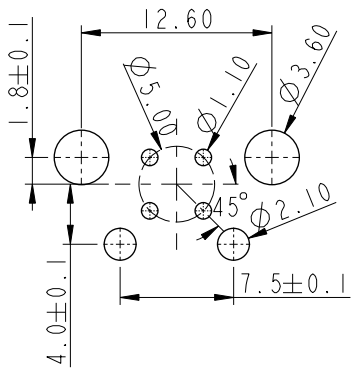

4P

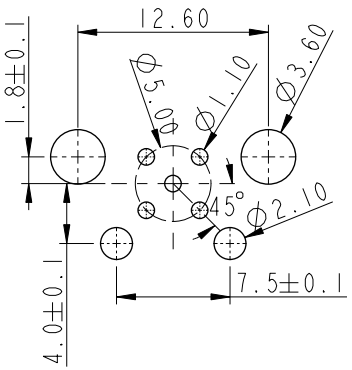

5P

UNIT: mm

TOLERANCE
.X ±0.25
.XX ±0.1
.XXX ±0.05
ANGLES ±1°

TITLE: N SEN, M12 A -PLASTIC, SCREW RECEPTACLE, M, M, PCB R (B)

SCALE: 3:2 | SIZE: A4 | SHEET 2 OF 2

REV.: C | WC-REV.: A.2 | (QC): Inspection item

Amphenol LTW

安費諾亮泰企業股份有限公司

ITEM NO	DRAWN BY: Yulong_wang	DATE: 2016-12-07
DWG NO: MSAP-XXPMMR-SF8003	CHECKED BY: Jinhai	DATE: 2016-12-07
CUSTOMER: ALTW	APPROVED BY: jerry	DATE: 2016-12-07

WI0814-03-RW01A2

THIS DOCUMENT IS SUBJECT TO CHANGE WITHOUT NOTICE. IT IS CONFIDENTIAL AND A PROPERTY OF Amphenol LTW. DISCLOSURE TO THIRD PARTY HAS TO BE AUTHORIZED BY Amphenol LTW.