THIS DRAWING IS UNPUBLISHED. RELEASED FOR PUBLICATION 20
© COPYRIGHT 20 BY - ALL RIGHTS RESERVED.

REVISIONS

P	LTR	DESCRIPTION	DATE	DWN	APVD
	D1	REVISED PER ECO-19-015221	04OCT2019	KF	NE
	D2	REVISED PER ECO-20-008953	29JUN2020	CN	AC
	D3	REVISED PER ECO-20-009877	15JUL2020	CN	AC
	D4	REVISED PER ECO-20-010646	31JUL2020	CN	AC

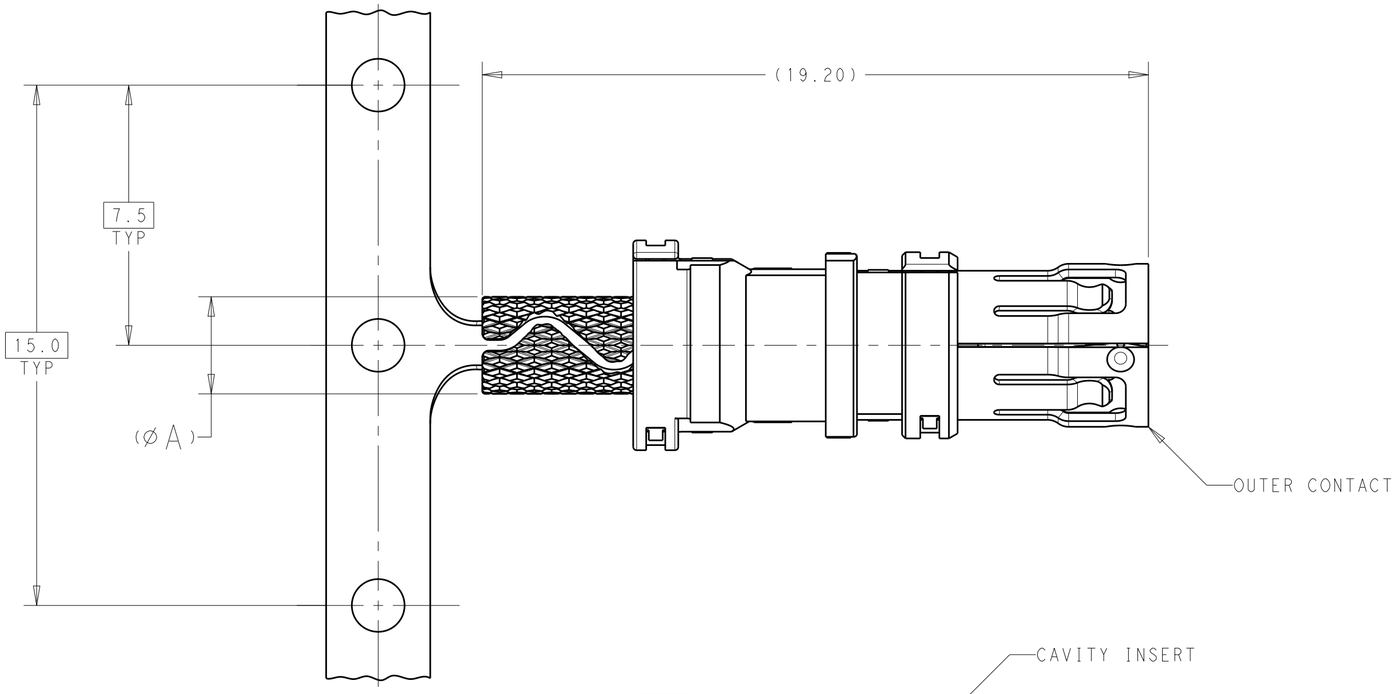

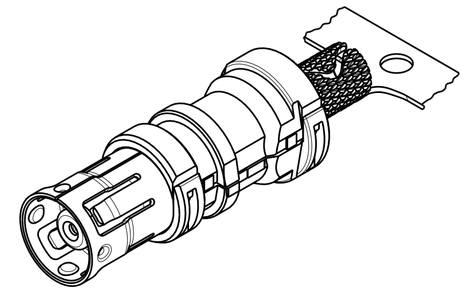

ISOMETRIC VIEW
SCALE 5:1

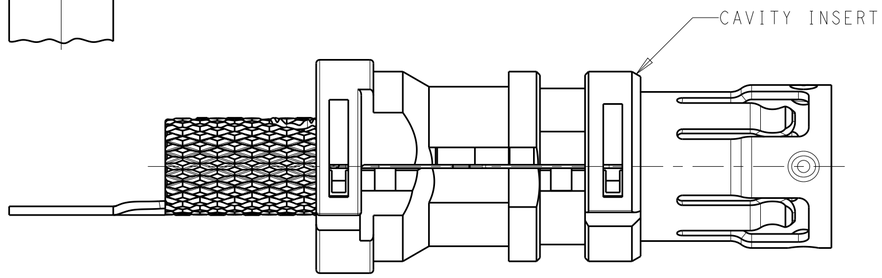

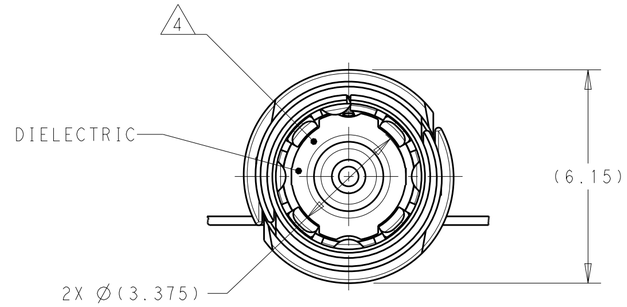

	A	CAVITY INSERT COLOR	DIELECTRIC COLOR	MATERIAL	APPLICABLE CABLE SIZE	PART NUMBER
	3.01	NATURAL	NATURAL	6	RTK044	1-2203274-0
	2.22	NUT BROWN	NUT BROWN	6	1.5CS, 1.5DS	2203274-8
	2.22	NUT BROWN	NUT BROWN	6	1.5CS, 1.5DS, DACAR 462, RG-174, RG-174 LL, RG-316	2203274-7
OBSOLETE	-	-	-	-	-	2203274-6
OBSOLETE	-	-	-	-	-	2203274-5
OBSOLETE	-	-	-	-	-	2203274-4
	2.80	GREEN	GREEN	6	RTK-031, SHIKOKU 2DS-PPFW(TA)	2203274-3
OBSOLETE	-	-	-	-	-	2203274-2
	3.65	JET BLACK	SIGNAL BLUE	6	RG-58, RG-58 LL	2203274-1

1. 2203274-3 AS SHOWN.
2. OUTER CONTACT: PHOSPHOR BRONZE OR COPPER ALLOY.
   DIELECTRIC AND CAVITY INSERTS: POLYESTER PBT, COLOR: SEE TABLE.
3. OUTER CONTACT: 1.0µm MIN TIN.
4. CAVITY INSERT SUBASSEMBLY INTERFACE PER ISO 20860-1,
   ROAD VEHICLES - RADIO FREQUENCY INTERFACE - DIMENSIONS AND ELECTRICAL REQUIREMENTS.
5. PACKAGED ON REEL.
6. OUTER CONTACT: PHOSPHOR BRONZE OR COPPER ALLOY.
   DIELECTRIC: POLYESTER PBT; CAVITY INSERTS: NYLON; COLOR: SEE TABLE.

THIS DRAWING IS A CONTROLLED DOCUMENT.

DIMENSIONS: mm

TOLERANCES UNLESS OTHERWISE SPECIFIED:
0 PLC ±-
1 PLC ±-
2 PLC ±-
3 PLC ±-
4 PLC ±-
ANGLES ±-
FINISH 3

MATERIAL SEE TABLE

DWN D.J.HARDY 17AUG2015
CHK D.J.LANE 17AUG2015
APVD D.J.LANE 17AUG2015
PRODUCT SPEC 108-32137
APPLICATION SPEC 114-32145
WEIGHT -

TE Connectivity

NAME CAVITY INSERT SUBASSEMBLY, FEMALE, 180 DEGREE, FAKRA
-

SIZE	CAGE CODE	DRAWING NO	RESTRICTED TO
A2	-	C-2203274	

CUSTOMER DRAWING | SCALE 8:1 | SHEET 1 OF 1 | REV D4

1471-9 (3/13)