REV.	ECN NO.	DATE	SIGN	DESCRIPTION
B	LE3-780102	2007/08/09	Cloud	Change T-adaptor structure and IP level.
C	LE3-850023	2008/05/04	Li Chi Cheng	Modify the P/N.
D	LE3-910075	2009/01/14	Vicky	Modify the Wire Harness & Change Dimension.

THIS DOCUMENT IS SUBJECT TO CHANGE WITHOUT NOTICE. IT IS CONFIDENTIAL AND A PROPERTY OF Amphenol LTW. DISCLOSURE TO THIRD PARTY HAS TO BE AUTHORIZED BY Amphenol LTW.

ALTW DCC. DEPT. CONFIDENTIAL 2009.01.20 ISSUED

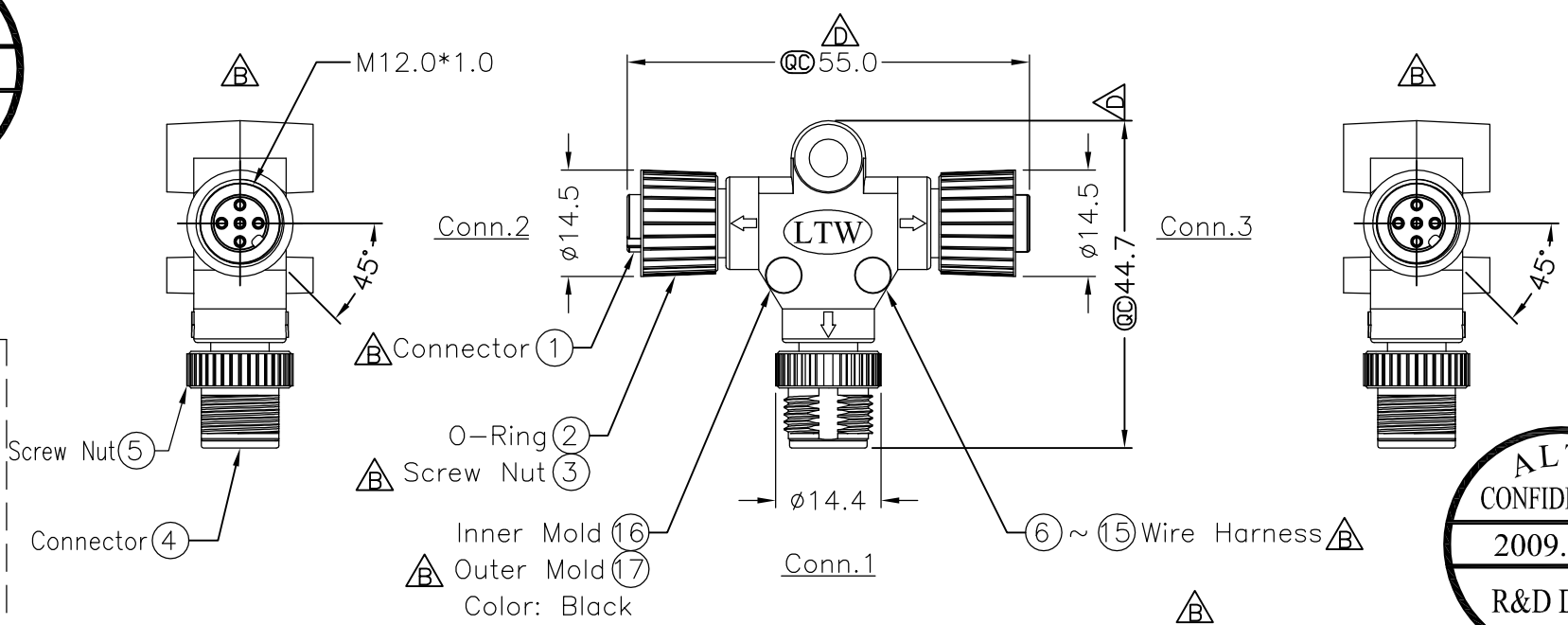

ALTW CONFIDENTIAL 2009.01.14 R&D DEPT.

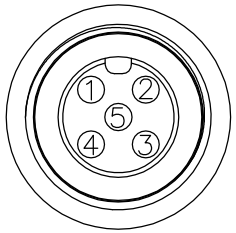

Conn.2&3 Pin Assignments Front View

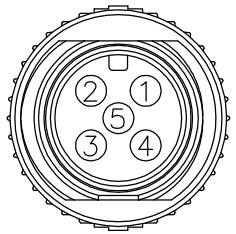

Conn.1 Pin Assignments Front View

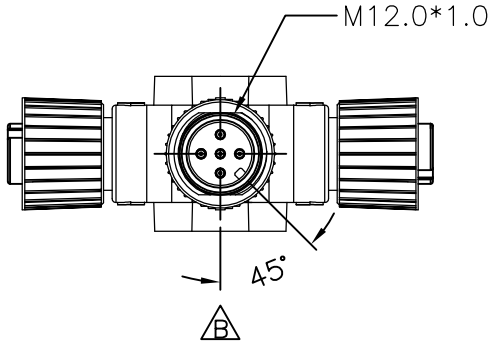

Wire Color	Conn.1	Conn.2	Conn.3
Blue (24AWG) 藍	5	5	5
White (24AWG) 白	4	4	4
Black (22AWG) 黑	3	3	3
Red (22AWG) 紅	2	2	2
Green (24AWG) 綠	1	1	1

Pin Out

Note:
* QC Important Dimension.
* Waterproof Rate:IP68.
  In 1 meter water within 24 hours.
* Connector:Black,PU.
* O-Ring:Green,Viton.
* Screw Nut:Zinc Alloy,Nickel Plated.
* Pin:Copper Alloy,Gold Plated.
* Wire Harness:UL1061 24AWG, Green,White,Blue.
* Wire Harness:UL1061 22AWG, Red,Black.

UNIT:mm	TITLE: M12 Conn T Adaptor MFF Conn MFF Pin,5Pin	Amphenol LTW 安費諾亮泰企業股份有限公司	ITEM NO: SS-050505-MFF-TS001 C
TOLERANCE: ±0.5 mm	SCALE: Free	SHEET 1 OF 1	DWG NO: SS-050505-MFF-TS001 C
	REV. D	SIZE A4	QC :Inspection Item
	CUSTOMER: ALTW		

DRAWN BY: Vicky	DATE: 2009/01/14	
CHECKED BY: Ivan	DATE: 2009/01/14	
APPROVED BY: Luke	DATE: 2009/01/14	

FMWI0702-01-01A2