THIS DRAWING IS UNPUBLISHED. RELEASED FOR PUBLICATION
© COPYRIGHT BY TYCO ELECTRONICS CORPORATION. ALL RIGHTS RESERVED.

LOC	DIST
DS	–

REVISIONS

P	LTR	DESCRIPTION	DATE	DWN	APVD
	A1	REVISED (ECR-08-016564)	07JUL.'08	BH	JK
	A2	REVISED (ECR-09-009626)	22MAY.'09	OH	M.K
	B	REVISED (ECR-09-016693)	01OCT.'09	OH	M.K

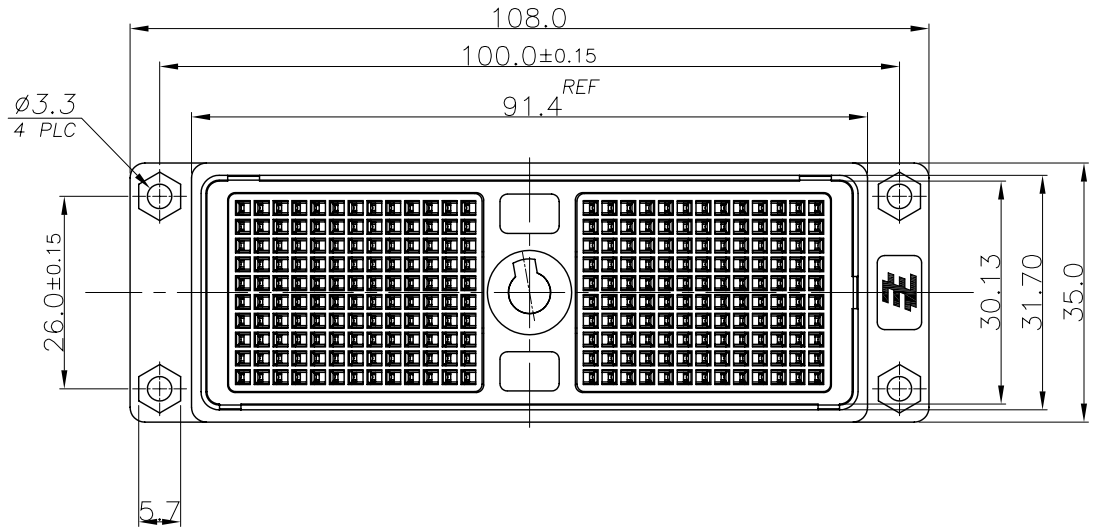

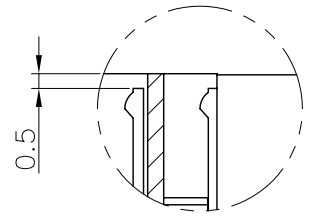

DETAIL A

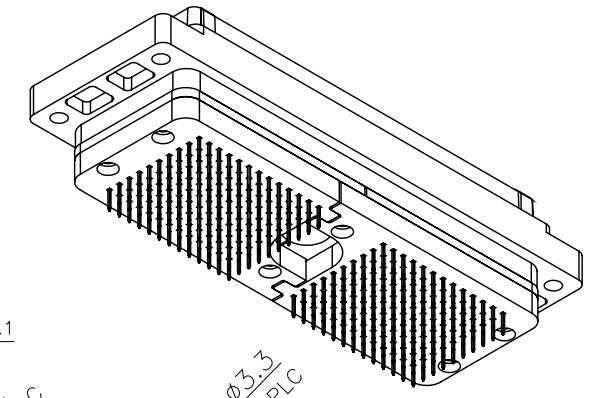

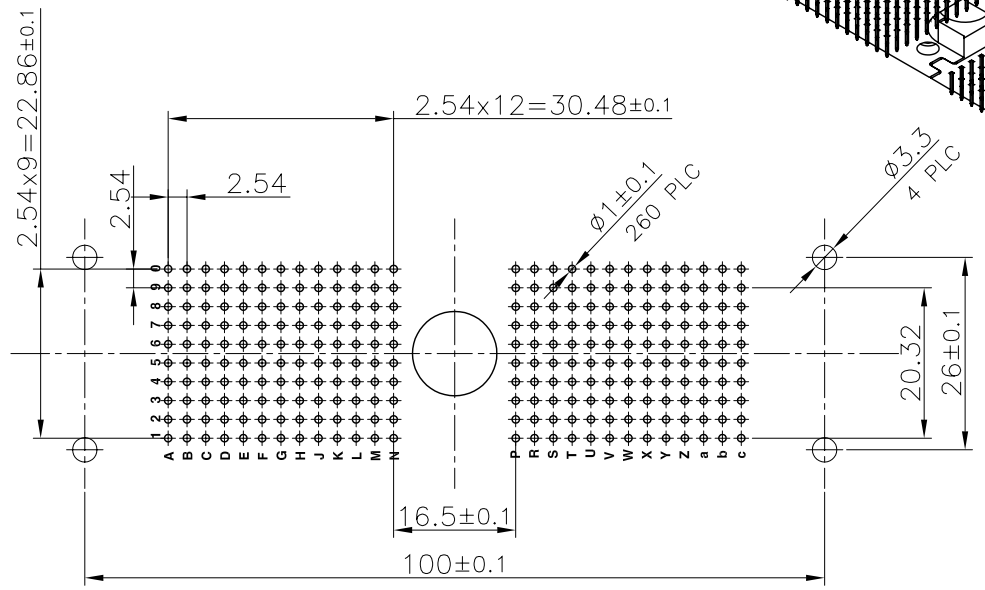

RECOMMENDED PCB LAYOUT

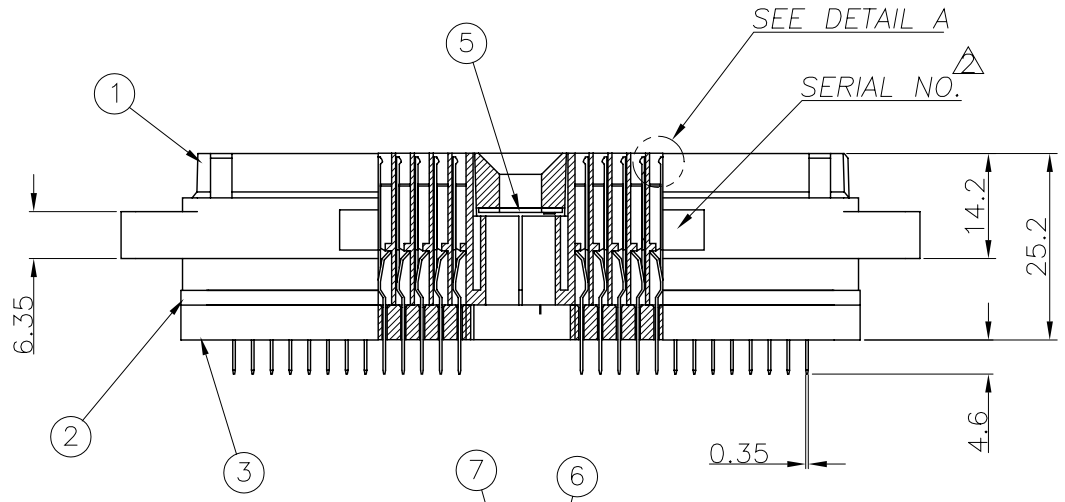

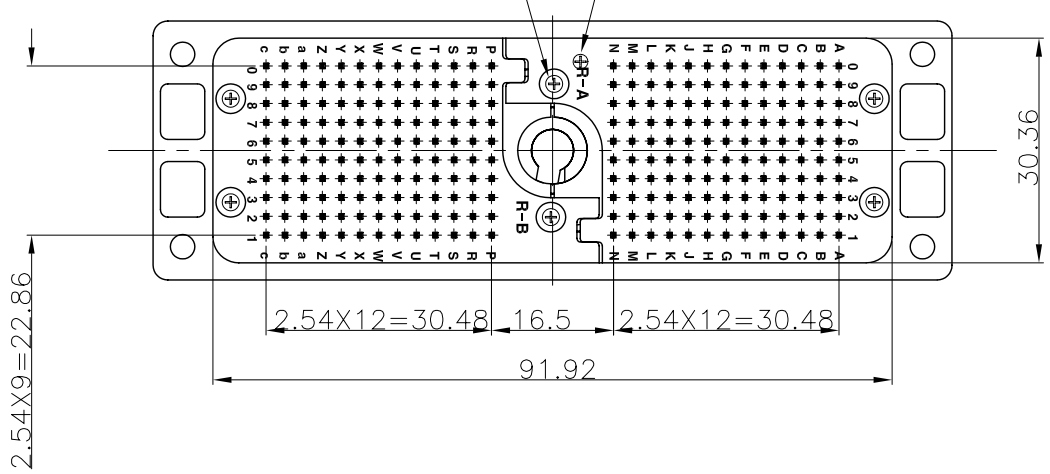

ITEM	DESCRIPTION	MATERIAL	FINISH	REMARK	Q'ty
7	BOLT M2x8	STAINLESS STEEL	–	–	6
6	BOLT M2x4	STAINLESS STEEL	–	–	8
5	CAM SLIDE PLATE	STAINLESS STEEL	–	–	1
4	TERMINAL	COPPER ALLOY	△1	–	260
3	PIN GUIDE	PC GF30	–	UL 94V-0	2
2	RECEPTACLE HOUSING	PBT GF30	–	UL 94V-0	2
1	RECEPTACLE DIECASTING	ALUMINUM	NICKEL PLATING	–	1

NOTE.
△1 PLATING :
CONTACT AREA : 0.8um MIN. GOLD OVER 1.27~3.0um NICKEL.
OTHERS : GOLD FLASH OVER 1.27~3.0um MIN. NICKEL.
△2 SERIAL NUMBER: YYMMDD-XXXX.

REV.	PART NO.	DESCRIPTION
B	2005802-1	M-ZIF CONN. REC 260P

THIS DRAWING IS A CONTROLLED DOCUMENT FOR TYCO ELECTRONICS CORPORATION. IT IS SUBJECT TO CHANGE AND THE CONTROLLING ENGINEERING ORGANIZATION SHOULD BE CONTACTED FOR THE LATEST REVISION.

DIMENSIONS: MM

TOLERANCES UNLESS OTHERWISE SPECIFIED:
0 PLC ±
1 PLC ±
2 PLC ± ±0.3
3 PLC ±
4 PLC ±
ANGLES

MATERIAL: SEE TABLE
FINISH: SEE TABLE

DWN: OH KWON
CHK: M.KIMURA
APVD: M.KIMURA
PRODUCT SPEC: 108-61097
APPLICATION SPEC: –
WEIGHT: 163G

Tyco Electronics
Tyco Electronics
Gyeungsan, Korea

NAME: M-ZIF CONN. REC 260P SOLDER TYPE

SIZE	CAGE CODE	DRAWING NO	RESTRICTED TO
A3	00779	C- 2005802	–

CUSTOMER DRAWING | SCALE 1/1 | SHEET 1 OF 1 | REV B

AMP 1470-19 REV 31MAR2000