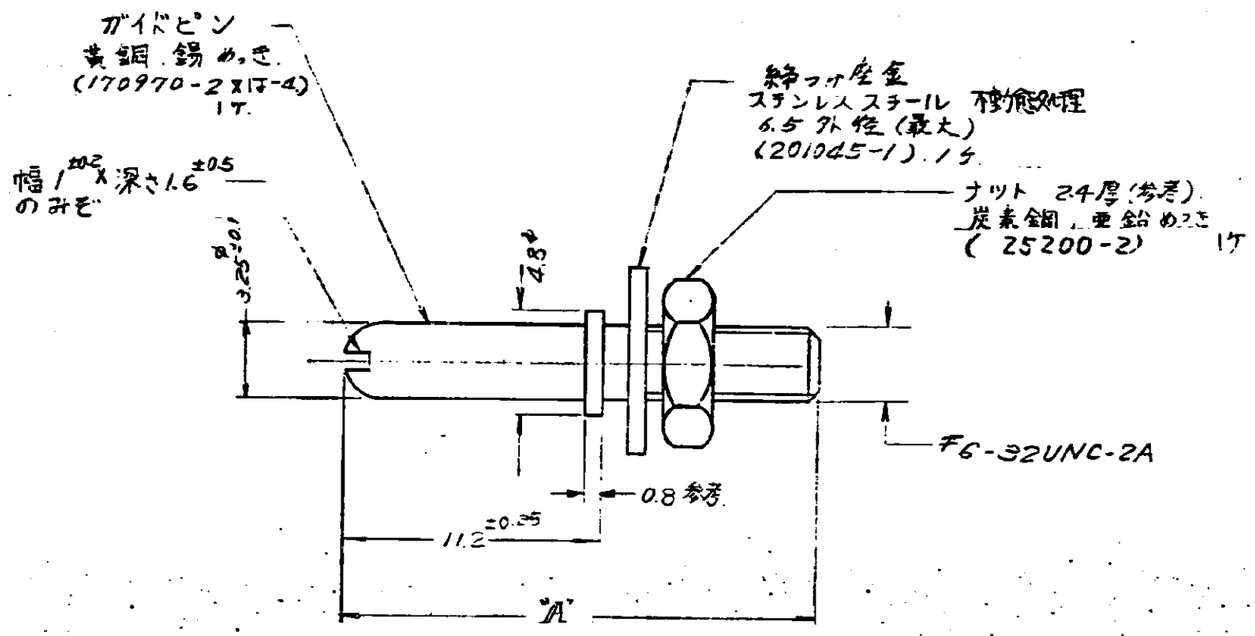

注記;

⚠ 類似品型番 201046-4

OBSOLETE	~~242~~	~~1 -2~~
	21.2	171084-1 ⚠
	"A"	番号 (NUMBER)

H	REVISED PER ECR-17-004338	C.L	N.Y
G	REVISED J-12020		
F	ECN J82-5727		
E	REDRAWN WITH CHANGE		
D	ECN J6-5255		
C	REVISED		
B	REVISED TOLERANCE		
A	REVISED		
	RELEASED		

C-171084

部品番号 NUMBER	部品名 NAME	備考 REMARKS
	参考図面 (CUSTOMER COPY) REFERENCE ONLY	
材質 MATERIAL: 上参照	電線 WIRE RANGE: AWG	TE Connectivity
仕上 FINISH: 上参照	絶縁 INSULATION DIA.	
TOLERANCE EXCEPT AS NOTED	SCALE 4:1	C-171084 REV. H
	NAME: ニーライトピン	

© 1970 by AMP Japan Ltd. ALL RIGHTS RESERVED. AMP PRODUCTS COVERED BY PATENTS AND OR PATENTS PENDING