© 2021 TE Connectivity. All Rights Reserved.

REVISIONS					
P	LTR	DESCRIPTION	DATE	DWN	APVD
	B	REVISED PER ECO-21-003080	02NOV2021	LN	DH

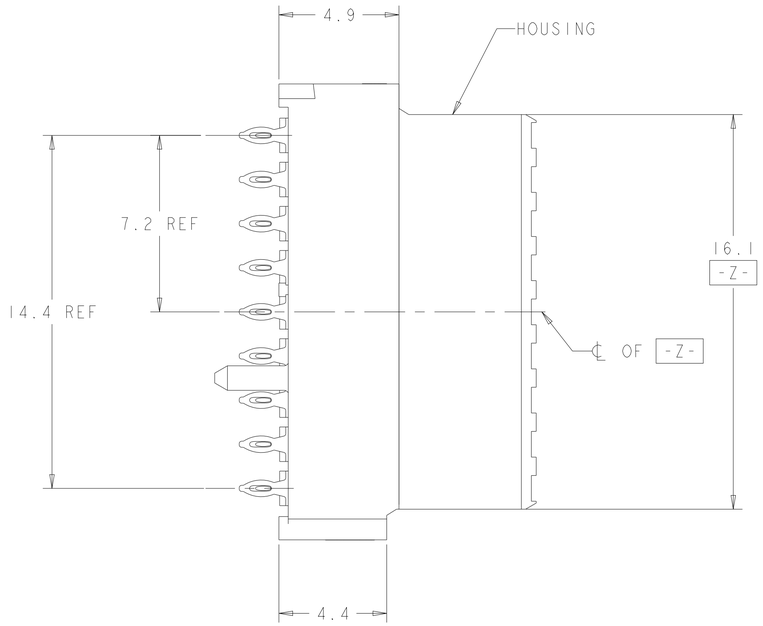

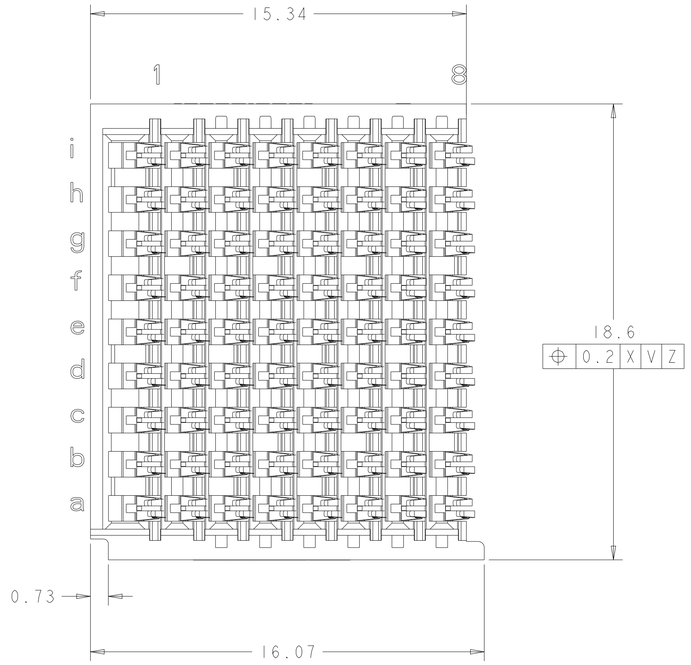

ALIGNMENT TAB

	1	2	3	4	5	6	7	8
a	2	2	2	2	2	2	3	3
b	2	2	2	2	2	2	3	3
c	2	2	2	2	2	2	3	3
d	2	2	2	2	2	2	3	3
e	2	2	2	2	2	2	3	3
f	2	2	2	2	2	2	3	3
g	2	2	2	2	2	2	3	3
h	2	2	2	2	2	2	3	3
i	2	2	2	2	2	2	3	3

2 = RT2 CONTACT (SEE NOTE 3)

3 = RT3 CONTACT (SEE NOTE 4)

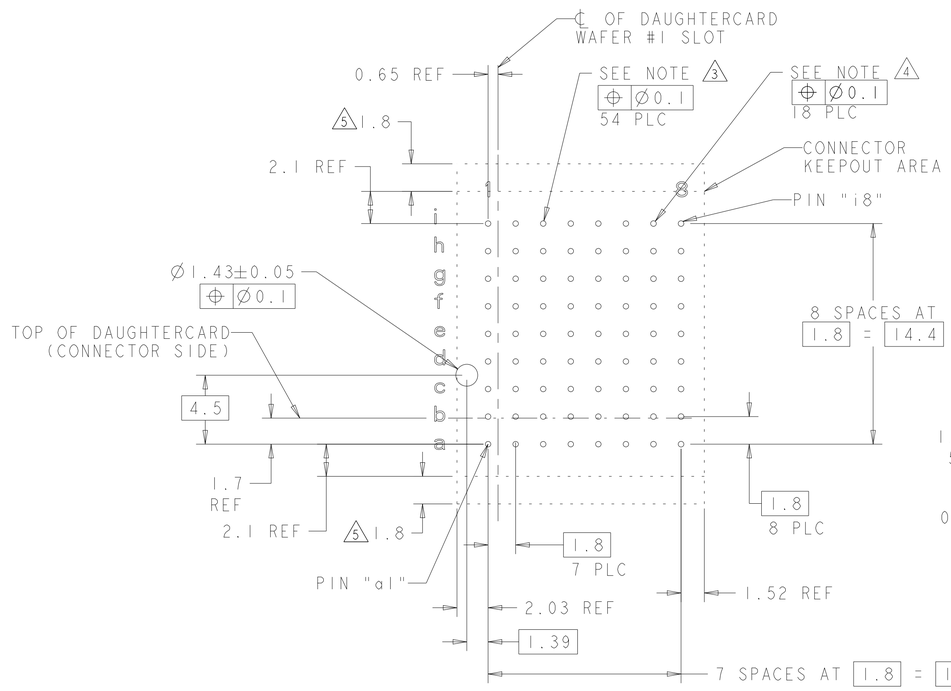

PC BOARD LAYOUT
(CONNECTOR SIDE)

SEE SHEET 2 FOR RTM)
SCALE 5:1

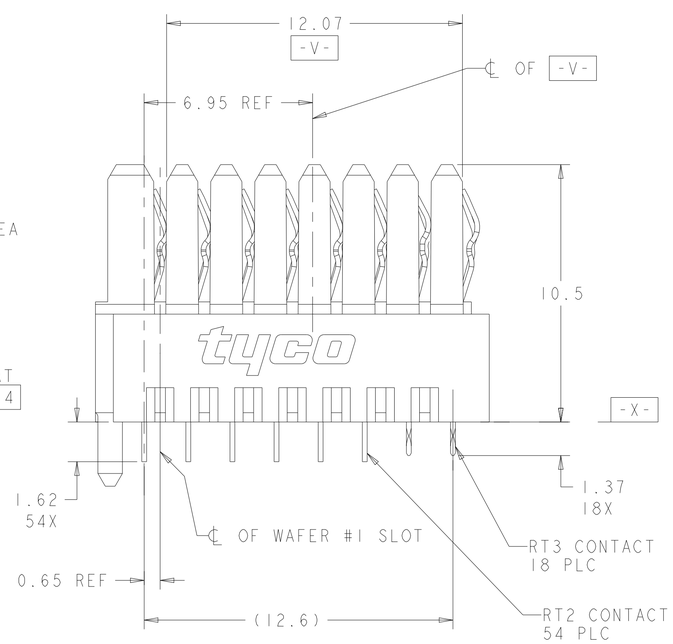

1. HOUSING: LCP, UL94V0, COLOR: BLACK.
   CONTACT: PHOSPHOR BRONZE.

2. FINISH: 1.27µm GOLD IN CONTACT AREA 1.27µm MIN. TIN-LEAD (93/7) ON PCB TAIL OVER 2.54µm MIN. NICKEL OVER ALL.

3. PLATED THROUGH HOLE PER 114-13056, FIGURE 4 OR 114-163004, FIGURE 10.

4. PLATED THRU HOLE SPECIFICATION:
   DRILLED HOLE: Ø0.45±0.02
   0.025-0.050 THICK COPPER PLATING (MAX HARDNESS 150 KNOOP)
   FINISH OPTIONS:
   0.0038-0.0124 HOT AIR SOLDER LEVELING (HASL) TIN-LEAD (SnPb)
   0.0005-0.004 IMMERSION TIN (Sn)
   0.0002-0.0005 ORGANIC SOLDERABILITY PRESERVATIVE (OSP)
   0.0001-0.0005 IMMERSION SILVER (Ag)
   0.0001-0.0005 IMMERSION GOLD OVER 0.00127-0.0076 NICKEL (ENIG)
   FINISH HOLE DIAMETER AFTER PLATING = Ø0.36 REF

5. ADDITIONAL CONNECTOR-SIDE KEEPOUT AREA REQUIRED IF CONNECTOR-SIDE EXTRACTION TOOL IS TO BE USED.

6. FINISH: 1.27µm MIN GOLD IN CONTACT AREA, 0.50µm MIN TIN ON PCB TAIL OVER 2.54µm MIN. NICKEL OVER ALL.

7. FINISH: 1.27µm GOLD IN CONTACT AREA 1.27µm MIN. TIN-LEAD (60/40) ON PCB TAIL OVER 2.54µm MIN. NICKEL OVER ALL.

PLATING	PART NO
7	2332817-3
6	2332817-2
2	2332817-1

THIS DRAWING IS A CONTROLLED DOCUMENT.

DIMENSIONS: mm

TOLERANCES UNLESS OTHERWISE SPECIFIED:
0 PLC ±-
1 PLC ±0.5
2 PLC ±0.13
3 PLC ±-
4 PLC ±-
ANGLES ±1°0'

MATERIAL: - 1 -

FINISH: - SEE TABLE -

DWN D. BELACK 16OCT2018
CHK A. TSANG 16OCT2018
APVD D. HOANG 16OCT2018
PRODUCT SPEC 108-2072-3
APPLICATION SPEC 114-163004
WEIGHT 3.55g

TE Connectivity

NAME VERTICAL RECEPTACLE ASSEMBLY, LEFT END, HALF, MULTIGIG RT 3

SIZE A1 | CAGE CODE 00779 | DRAWING NO C-2332817 | RESTRICTED TO

CUSTOMER DRAWING | SCALE 2:1 | SHEET 1 OF 1 | REV B

4805 (3/13)