THIS DRAWING IS UNPUBLISHED. RELEASED FOR PUBLICATION - ,- .
© COPYRIGHT - BY TYCO ELECTRONICS CORPORATION. ALL INTERNATIONAL RIGHTS RESERVED.

LOC	DIST
GP	00

REVISIONS

P	LTR	DESCRIPTION	DATE	DWN	APVD
	C	REVISED PER ECO-10-011568	04JUN10	HMR	SB

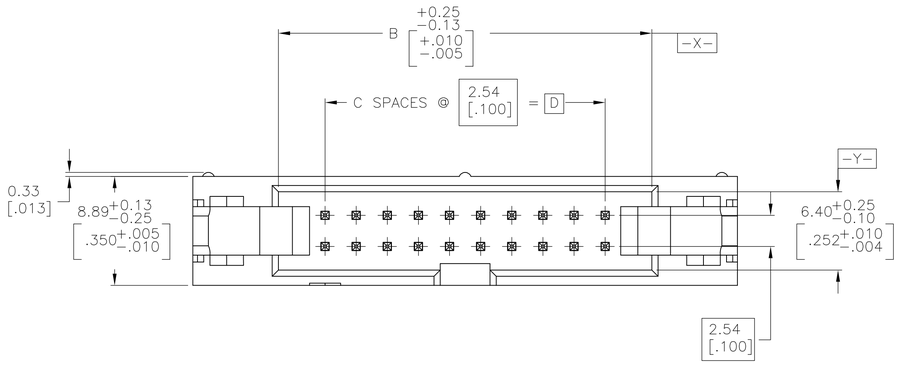

1. HOUSING & EJECT LATCHES: PBT, UL94V-0, COLOR BLUE. POSTS: PHOSPHOR BRONZE.
2. POSTS: 0.00076[.000030] MIN GOLD ON MATING AREA, 0.00254[.000100] MIN TIN ON SOLDER END, ALL OVER 0.00127[.000050] MIN NICKEL ON ENTIRE POST.
3. DATUMS S & T TO BE ESTABLISHED BY CUSTOMER.
4. SHORT EJECT LATCHES FOR MATING IDC/AMP-LATCH STYLE RECEPTACLES WITHOUT A STRAIN RELIEF
5. MANUFACTURER'S LOGO TO BE LOCATED IN APPROXIMATE AREA SHOWN.

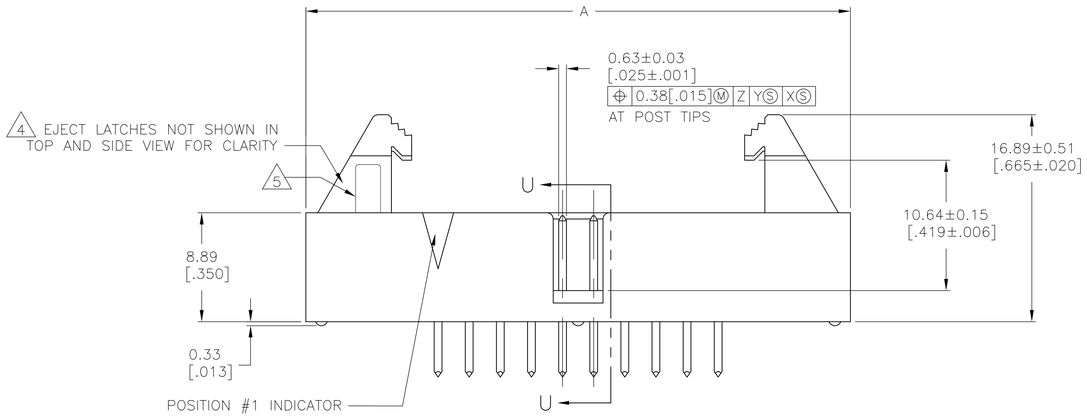

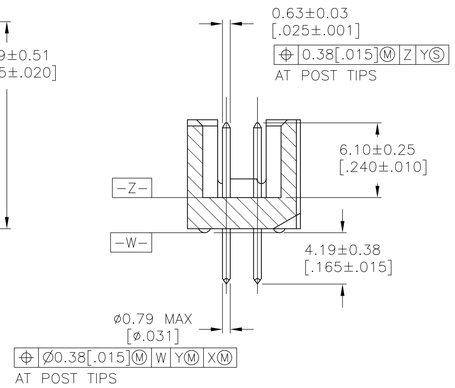

SECTION U-U

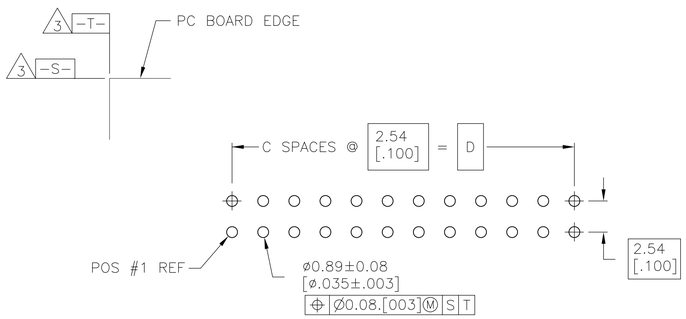

RECOMMENDED PC BOARD LAYOUT
(VIEWED FROM CONNECTOR SIDE)

	68.58 [2.700]	27	76.20 [3.000]	90.17 [3.550]	56	1-1761687-8
OBSOLETE	60.96 [2.400]	24	68.58 [2.700]	82.55 [3.250]	50	1-1761687-5
	48.26 [1.900]	19	55.88 [2.200]	69.85 [2.750]	40	1-1761687-3
	40.64 [1.600]	16	48.26 [1.900]	62.23 [2.450]	34	1-1761687-1
	30.48 [1.200]	12	38.10 [1.500]	52.07 [2.050]	26	1761687-9
	22.86 [.900]	9	30.48 [1.200]	44.45 [1.750]	20	1761687-7
	10.16 [.400]	4	17.78 [.700]	31.75 [1.250]	10	1761687-3
	D	C	B	A	NO OF POS	PART NUMBER

COPYRIGHT 2005
TYCO ELECTRONICS CORP
ALL RIGHTS RESERVED

THIS DRAWING IS A CONTROLLED DOCUMENT.

DIMENSIONS: mm [INCHES]

TOLERANCES UNLESS OTHERWISE SPECIFIED:
0 PLC ± –
1 PLC ± –
2 PLC ± –
3 PLC ± 0.13[.005]
4 PLC ± –
ANGLES ± –

MATERIAL 1
FINISH 2

DWN B. CRISAMORE/DTI 05JUN05
CHK S.BOLASH 05JUN05
APVD M.WALMSLEY 05JUN05
PRODUCT SPEC —
APPLICATION SPEC —
WEIGHT —

Tyco Electronics
Tyco Electronics Corporation
Harrisburg, PA 17105-3608

NAME HEADER ASSEMBLY, SHORT EJECT LATCHES, VERTICAL, LOW PROFILE, IDC

SIZE	CAGE CODE	DRAWING NO	RESTRICTED TO
A1	00779	C-1761687	—

CUSTOMER DRAWING | SCALE 4:1 | SHEET 1 OF 1 | REV C

4805 (1/08)