THIS DRAWING IS UNPUBLISHED. RELEASED FOR PUBLICATION -,- .
© COPYRIGHT - TE Connectivity Ltd. ALL RIGHTS RESERVED.

REVISIONS					
P	LTR	DESCRIPTION	DATE	DWN	APVD
	P	CUTTING BURR DETAILS ADDED	19NOV2018	RK	PS

1. MATERIAL:
   HOUSING: POLYAMIDE 6, UL94V-2.
   COLOR: NATURAL (OFF WHITE)
   TUBULAR CONTACT: BRASS TIN, PLATED.
   SCREWS: M3, STEEL, ZINC PLATED W/ NON-HEXAVALENT CHROMATE (CHROME III).

2. CURRENT RATING: 30A
   OPERATING VOLTAGE: 250V
   WIRE RANGE: 12-26 AWG

3. CONTINUOUS OPERATING TEMP.: 100°C MAX.

4. CUTTING PROJECTION CAN BE ON BOTH SIDES DEPENDING ON CUTTING LOCATION

5. CUTTING BURR MAX. 1mm ALLOWED.

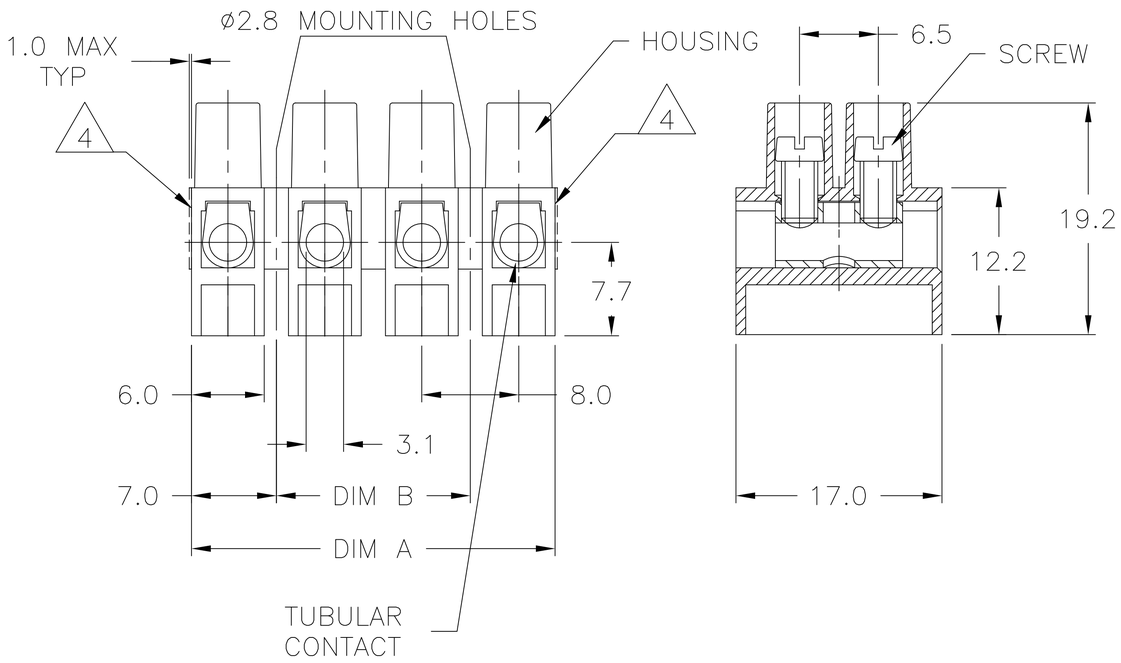

1776321-4 AS SHOWN

DIM B	DIM A	NO. OF POS.	CATALOG NUMBER	TE PART NUMBER
80.0	94.0	12	TSB230K12	1-1776321-2
72.0	86.0	11	TSB230K11	1-1776321-1
64.0	78.0	10	TSB230K10	1-1776321-0
56.0	70.0	9	TSB230K09	1776321-9
48.0	62.0	8	TSB230K08	1776321-8
40.0	54.0	7	TSB230K07	1776321-7
32.0	46.0	6	TSB230K06	1776321-6
24.0	38.0	5	TSB230K05	1776321-5
16.0	30.0	4	TSB230K04	1776321-4
8.0	22.0	3	TSB230K03	1776321-3
-	14.0	2	TSB230K02	1776321-2
-	6.0	1	TSB230K01	1776321-1

THIS DRAWING IS A CONTROLLED DOCUMENT.

DIMENSIONS: mm

TOLERANCES UNLESS OTHERWISE SPECIFIED:
0 PLC ± -
1 PLC ± 0.3
2 PLC ± 0.25
3 PLC ± -
4 PLC ± -
ANGLES ± 2°

MATERIAL: SEE NOTES
FINISH: SEE NOTES

DWN S SCHLEGEL 3/21/05
CHK C RICHARD 3/21/05
APVD C RICHARD 3/21/05
PRODUCT SPEC -
APPLICATION SPEC -
WEIGHT -

TE Connectivity Ltd.

NAME: 8mm PITCH, TERMINAL BLOCK - HIGH CURRENT
-
-

SIZE	CAGE CODE	DRAWING NO	RESTRICTED TO
A3	00779	C-1776321	-

CUSTOMER DRAWING | SCALE NTS | SHEET 1 OF 1 | REV P

1470-19 (1/15)