THIS DRAWING IS UNPUBLISHED. RELEASED FOR PUBLICATION 2012
© COPYRIGHT 2012 BY TE CONNECTIVITY ALL RIGHTS RESERVED.

LOC	DIST
-	-

REVISIONS

P	LTR	DESCRIPTION	DATE	DWN	APVD
	F2	REVISED PER ECO-18-013833	17DEC2018	RS	MD
	G	REVISED PER ECO-20-007992	11JUN2020	BKW	SW

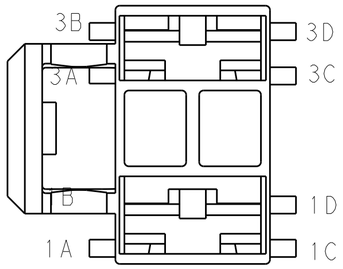

SPECIAL REAR VIEW THAT MATES WITH THE HEADER VIEWS BELOW SHOWING THE KEYING & POLARIZATION

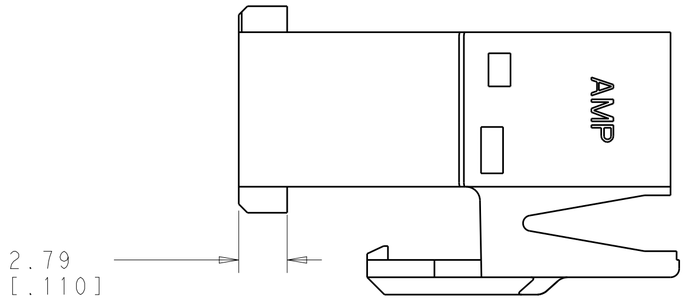

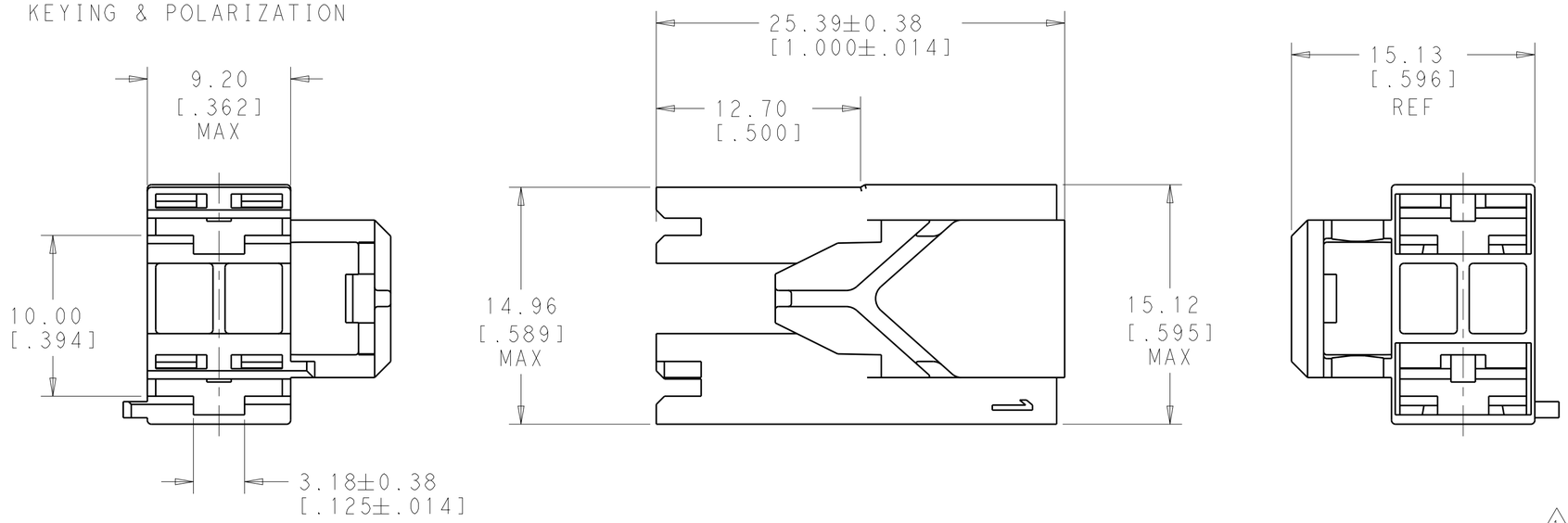

1. ACCORDING TO IEC 60335-1, GWEPT 750°C WITHOUT FLAME
2. PRELIMINARY - NOT FOR PRODUCTION
3. DELETED NOTE
4. DELETED NOTE
5. ACCEPTS RECEPTACLES 2238135, 2238136, 1217378, 1217094 AND 1217095
6. OBSOLETE PARTS

	KEYING FEATURE	POLARIZATION FEATURE	COLOR	PART NUMBER
1	1C, 3C	NONE	GRAY	5-1969536-6
1	1C	1A	BLUE	5-1969536-5
1	1C	1B	BLACK	5-1969536-4
1	1D, 3D	NONE	NATURAL	5-1969536-3
1	3C	1A	YELLOW	5-1969536-2
1	1C, 3C	NONE	GREEN	5-1969536-1
6	1C, 3C	NONE	GRAY	~~1969536-6~~
6	1C	1A	BLUE	~~1969536-5~~
6	1C	1B	BLACK	~~1969536-4~~
6	1D, 3D	NONE	NATURAL	~~1969536-3~~
6	3C	1A	YELLOW	~~1969536-2~~
6	1C, 3C	NONE	GREEN	~~1969536-1~~

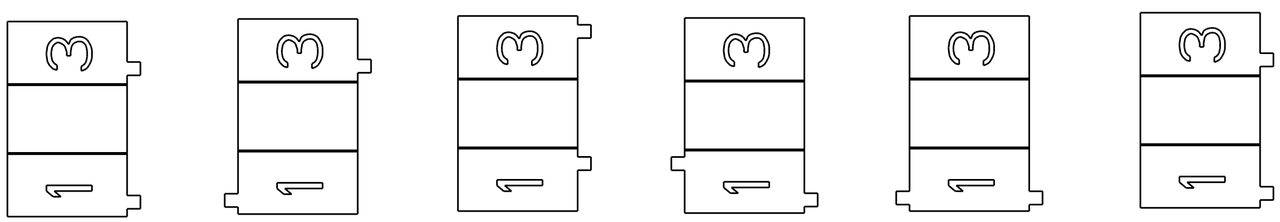

5-1969536-1 5-1969536-2 5-1969536-3 5-1969536-4 5-1969536-5 5-1969536-6

HEADER VIEWS

THIS DRAWING IS A CONTROLLED DOCUMENT.

DIMENSIONS: mm[INCHES]

TOLERANCES UNLESS OTHERWISE SPECIFIED:
0 PLC ±-
1 PLC ±-
2 PLC ±0.25 [.010]
3 PLC ±-
4 PLC ±-
ANGLES ±-

MATERIAL: NYLON
FINISH: SEE TABLE

DWN JR RUTH 19JUN2012
CHK F. LUPO 15MAR2017
APVD R. ROBONF 15MAR2017
PRODUCT SPEC -
APPLICATION SPEC -
WEIGHT -

TE Connectivity

NAME: HOUSING, RECEPT, POSI-LOCK MK III, 6.35 [.250] SERIES, 3 POSITION, 2 CIRCUIT

SIZE	CAGE CODE	DRAWING NO	RESTRICTED TO
A2	00779	C-1969536	-

Customer Drawing | SCALE 4:1 | SHEET 1 OF 1 | REV G

1471-9 (3/11)