~~THIS DRAWING IS UNPUBLISHED~~ RELEASED FOR PUBLICATION 2012
© COPYRIGHT 2012 Tyco Electronics AMP GmbH ALL RIGHTS RESERVED.

LOC	DIST
A1	-

REVISIONS

P	LTR	DESCRIPTION	DATE	DWN	APVD
	A8	2825667-1 ADDED	15NOV2019	JA	PKS
	A9	ACTIVATED PART NUMBER 2825667-1	10MAR2020	PC	KR
	A10	REVISED PER ECR-20-010099	20JUL2020	BDA	KR
	A11	REVISED PER ECR-20-012333	09SEP2020	BDA	KR

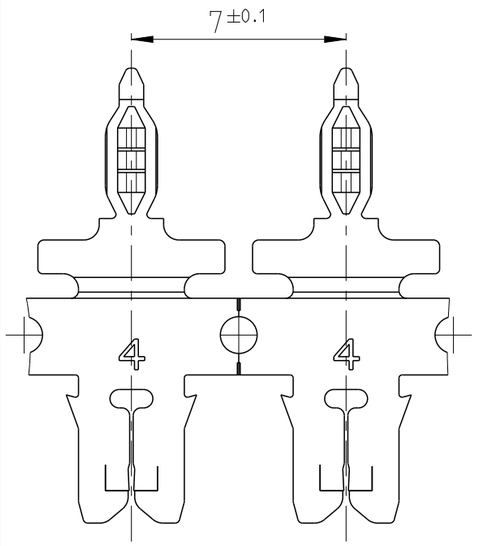

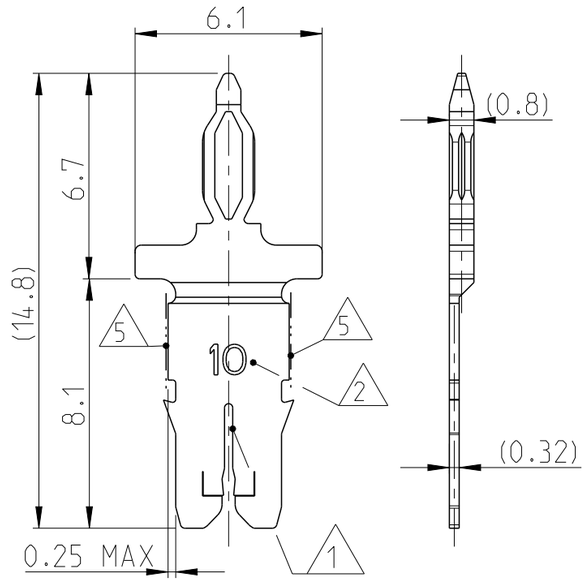

CUT OFF BY INSERTION
OR LOOSE PIECE DIMENSION
2 PLCS

1. SLOT ACCEPTS SINGLE OR DOUBLE COPPER MAGNET WIRE SAME DIAMETERS NOT FOR USE WITH ALUMINUM MAGNET WIRE
2. IDENTIFICATION NUMBER FOR MAGNET WIRE RANGE

} SEE TABLE

3. CONTACT CAVITY AND APPLICATION ACC. SPECIFICATION 114-94229
4. PCB LAYOUT, HOLES ACC. SPECIFICATION. 108-90801
5. CUTTING LINE: AREA WILL BE CUTTED OFF BY TERMINATION
6. CAVITY CENTER TO HOLE CENTER
7. DELIVERY STATE: STRIP ON CRRUGATED REEL WITH PAPER INTERLAYER
8. TO BE APPROVED, ON DEMAND BY TE ENGINEERING
9. MAX. 2 SPLICES PER REEL; SPLICES BE NOT BONDED TOGETHER
10. PRELIMINARY- NOT RELEASED FOR PRODUCTION.

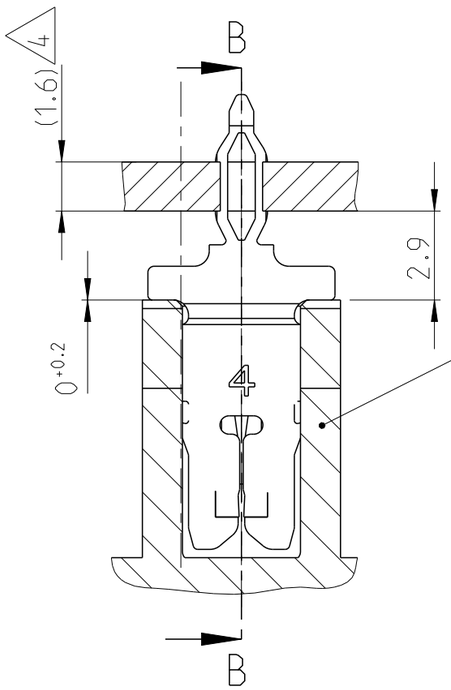

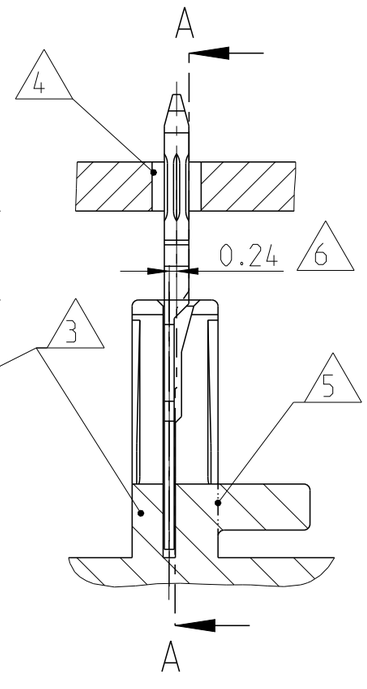

11 NOTE DELETED

12. PART NUMBER IS OBSOLETE

DIRECTION TOP OF REEL

1:1

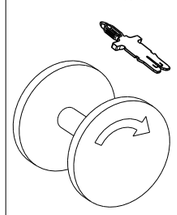

LOOSE PEICE PART NUMBER	IDENTIFICATION NO 2	DOUBLE WIRE (1 AWG BARE WIRE RANGE)	SINGLE WIRE (1 AWG BARE WIRE RANGE)	DOUBLE WIRE (1 BARE WIRE RANGE)	SINGLE WIRE (1 BARE WIRE RANGE)	PART NO
2825667-1	24	-	19.5 - 17.5; 17 8	-	Ø 0.85mm to Ø 1.12mm	2120747-2
	12	-	22.5 - 20; 19.5 8	-	Ø 0.63mm to Ø 0.85mm	2120746-2
~~2825388-1~~ 12	10	26 - 23	26 - 22.5	Ø 0.4mm to Ø 0.56mm	Ø 0.4mm to Ø 0.63mm	2120745-2
	6	29.5 - 26.5; 26 8	29.5 - 26.5; 26 8	Ø 0.265mm to Ø 0.4mm	Ø 0.265mm to Ø 0.4mm	2120744-2
	4	33 - 30; 29.5 8	33 - 30; 29.5 8	Ø 0.18mm to Ø 0.265mm	Ø 0.18mm to Ø 0.265mm	2120743-3 10
						2120743-2

THIS DRAWING IS A CONTROLLED DOCUMENT.

DIMENSIONS: mm

TOLERANCES UNLESS OTHERWISE SPECIFIED:

0 PLC	±0.2
1 PLC	±0.2
2 PLC	±0.2
3 PLC	±0.2
4 PLC	±0.2
ANGLES	±1°

MATERIAL CuNiSi

FINISH TINNED

DWN H.Ballmert 28NOV2012
CHK B.Schnaubelt 30NOV2012
APVD T.Klenner 30NOV2012
PRODUCT SPEC 108-94366
APPLICATION SPEC - 3
WEIGHT -

TE Connectivity

NAME MAG-MATE Slim Line Contact with Multispring
-

SIZE	CAGE CODE	DRAWING NO	RESTRICTED TO
A3	00779	C-2120743	-

Customer Drawing

SCALE 5:1 SHEET 1 OF 1 REV A11