THIS DRAWING IS UNPUBLISHED. RELEASED FOR PUBLICATION 2000
© COPYRIGHT 2000 - ALL RIGHTS RESERVED.

LOC	DIST
A1	-

REVISIONS

P	LTR	DESCRIPTION	DATE	DWN	APVD
	C	NEW DRAWING	01DEC2011	SH	KR

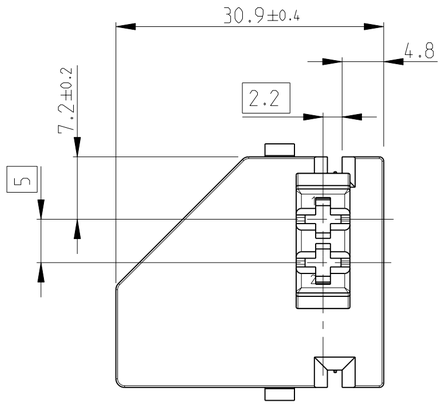

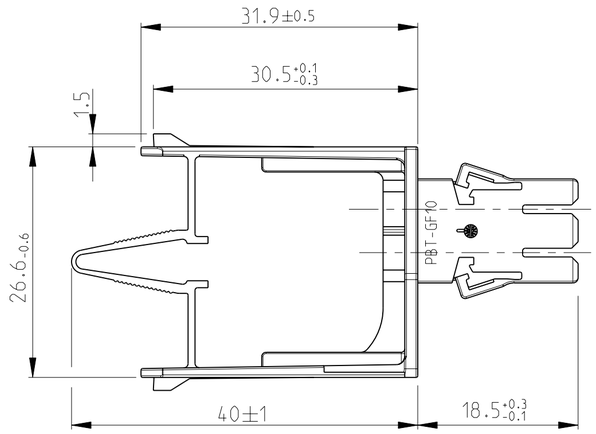

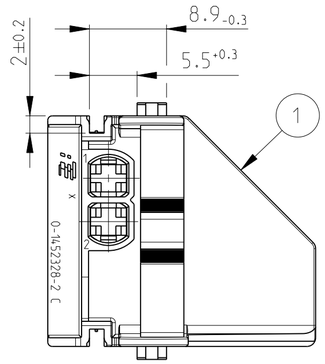

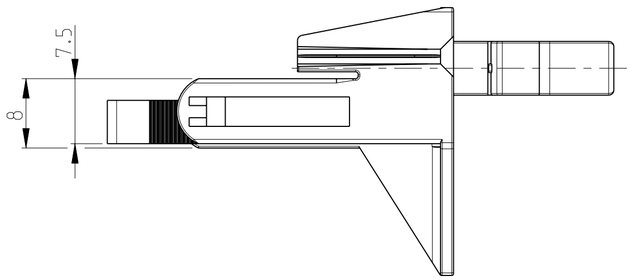

NOTES:
Bemerkungen:

1 INTERFACE SPEC. SEE BROSE NORM BN 590011-XXX / BN 590025-XXX
Anschlusskragen Spec.: Brose Norm BN 590011-XXX / BN 590025-xxx

APPLICABLE TIN CONTACTS Einsetzbare verzinnte Kontakte	
WIRE SIZE Leiterquerschnitt	TE : PN
0.5-1 mm^2	TE: 0-927771-1
1-2.5 mm^2	TE: 0-927768-1

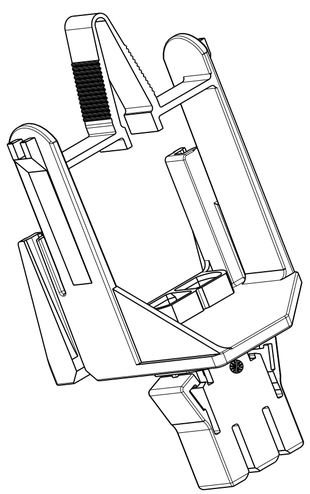

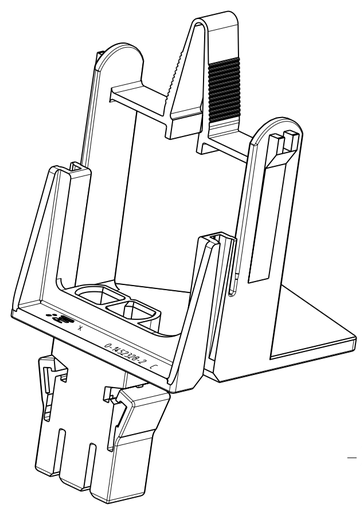

-2 AS SHOWN
wie gezeichnet

TE PART NR.	MATERIAL	COLOR	DESCRIPTION	ITEM NR.
0-1452328-2	PBT-GF15	BLACK	2 POS. SOCKET HOUSING JPT	1

THIS DRAWING IS A CONTROLLED DOCUMENT.

DIMENSIONS: mm

TOLERANCES UNLESS OTHERWISE SPECIFIED:
0 PLC ±0.3
1 PLC ±0.3
2 PLC ±0.3
3 PLC ±-
4 PLC ±-
ANGLES ±1°

MATERIAL: SEE TABLE
FINISH: -

DWN SHREESHAIL.H 01DEC2011
CHK K.ROTH 01DEC2011
APVD G.MUMPER 01DEC2011
PRODUCT SPEC -
APPLICATION SPEC 114-18540-1
WEIGHT -

TE Connectivity

NAME
2 POS. SOCKET HOUSING , JPT, RIGHT
2POLIGES BUCHSENGEHAEUSE, JPT, RECHTS
-

SIZE	CAGE CODE	DRAWING NO	RESTRICTED TO
A2	00779	C-1452328	-

CUSTOMER DRAWING
SCALE 2:1 SHEET 1 OF 1 REV C

1471-9 (3/11)

Pro/ENGINEER DRAWING