DRAWING MADE IN THIRD ANGLE PROJECTION

THIS DRAWING IS UNPUBLISHED. RELEASED FOR PUBLICATION ,19 .

© COPYRIGHT 19 BY AMP INCORPORATED. ALL INTERNATIONAL RIGHTS RESERVED.

LOC	DIST	P	F
G	14		

REVISIONS

ZONE	LTR	DESCRIPTION	DATE	APPD
	B	REVISED PER 0720-0937-96	05JUN96	DKS MJS

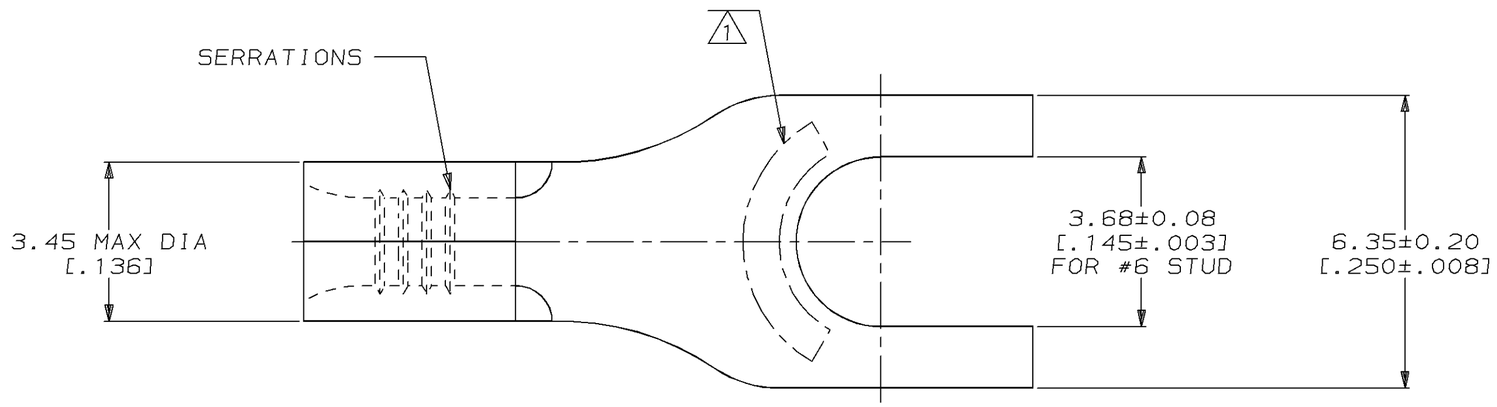

METRIC

DIMENSIONS LISTED IN mm [INCHES]

AMP WIRE RANGE	UL E13288 Listed
22-16 AWG STRANDED	22-16 AWG STRANDED

CSA LR7189 Certified	MILITARY P/N AND CLASS
NOT CERTIFIED	NOT APPLICABLE

1. STAMP AMP 22-18* APPROX AS SHOWN
22-16 TERMINALS ARE STAMPED 22-18 IN ACCORDANCE WITH MILITARY SPECIFICATION MIL-T-7928; COMMERCIAL WIRE RANGE IS 22-16

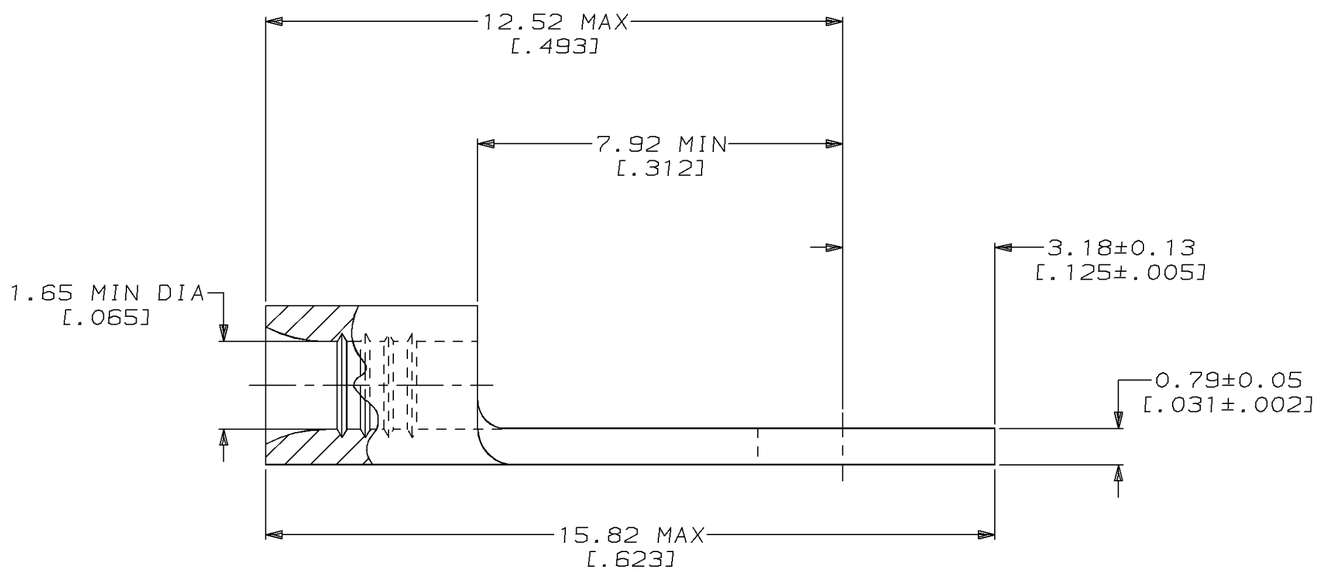

34518

QUANTITY	PACKAGE TYPE	PART NO
50	LOOSE PIECE, BOX	8-34518-2
–	LOOSE PIECE	34518

AMP INCORPORATED
CUSTOMER SERVICE SYSTEMS

FOR ADDITIONAL PRODUCT INFORMATION OR COPIES OF DRAWINGS AND TECHNICAL DOCUMENTS	PRODUCT INFORMATION CENTER 1-800-522-6752
FOR APPLICATION TOOLING INFORMATION	TOOLING ASSISTANCE CENTER 1-800-722-1111
FOR ORDER ENTRY	1-800-526-5142

MAX RECOMMENDED OPERATING TEMPERATURE: 170°C MAX

VOLTAGE RATING: NOT APPLICABLE

WIRE CROSS SECTIONAL AREA RANGE: 0.26-1.65mm² [509-3,260] CIR MILS STRANDED

THIS DRAWING IS A CONTROLLED DOCUMENT FOR AMP INCORPORATED. IT IS SUBJECT TO CHANGE AND THE CONTROLLING ENGINEERING ORGANIZATION SHOULD BE CONTACTED FOR THE LATEST REVISION.

DO NOT SCALE PRINT.
UNLESS SPECIFIED
~~DIMENSIONS IN mm [INCHES]~~
TOLERANCES ON :
2 PLC DEC ± -
3 PLC DEC ± -
ANGLES ± -

MATERIAL: COPPER PER ASTM B-152 ANNEALED

FINISH: TIN PLATE 0.00254[.000100] MIN THK PER MIL-T-10727

DR	2-16-93 TA BRINKMAN
CHK	2-16-93 DA PATTERSON
APPD	2-16-93 DE MILLER
APPD	2-16-93 JL MECKLEY
PRODUCT SPEC	–
APPLICATION SPEC	–
WEIGHT	–

AMP Incorporated
Harrisburg, PA 17105-3608

NAME: TERMINAL, SPADE TONGUE, BUDGET

SIZE	CAGE CODE	DRAWING NO
C	00779	C-34518

SCALE 10:1 SHEET 1 OF 1

CUSTOMER DRAWING

AMP 1471-6 REV 3-92