Jan.1.2022 Copyright 2022 HIROSE ELECTRIC CO., LTD. All Rights Reserved.
In case of consideration for using Automotive equipment / device which demand high reliability, kindly contact our sales window correspondents.

	COUNT	DESCRIPTION OF REVISIONS	BY	CHKD	DATE		COUNT	DESCRIPTION OF REVISIONS	BY	CHKD	DATE
△					. .	△					. .
△					. .	△					. .
△					. .	△					. .

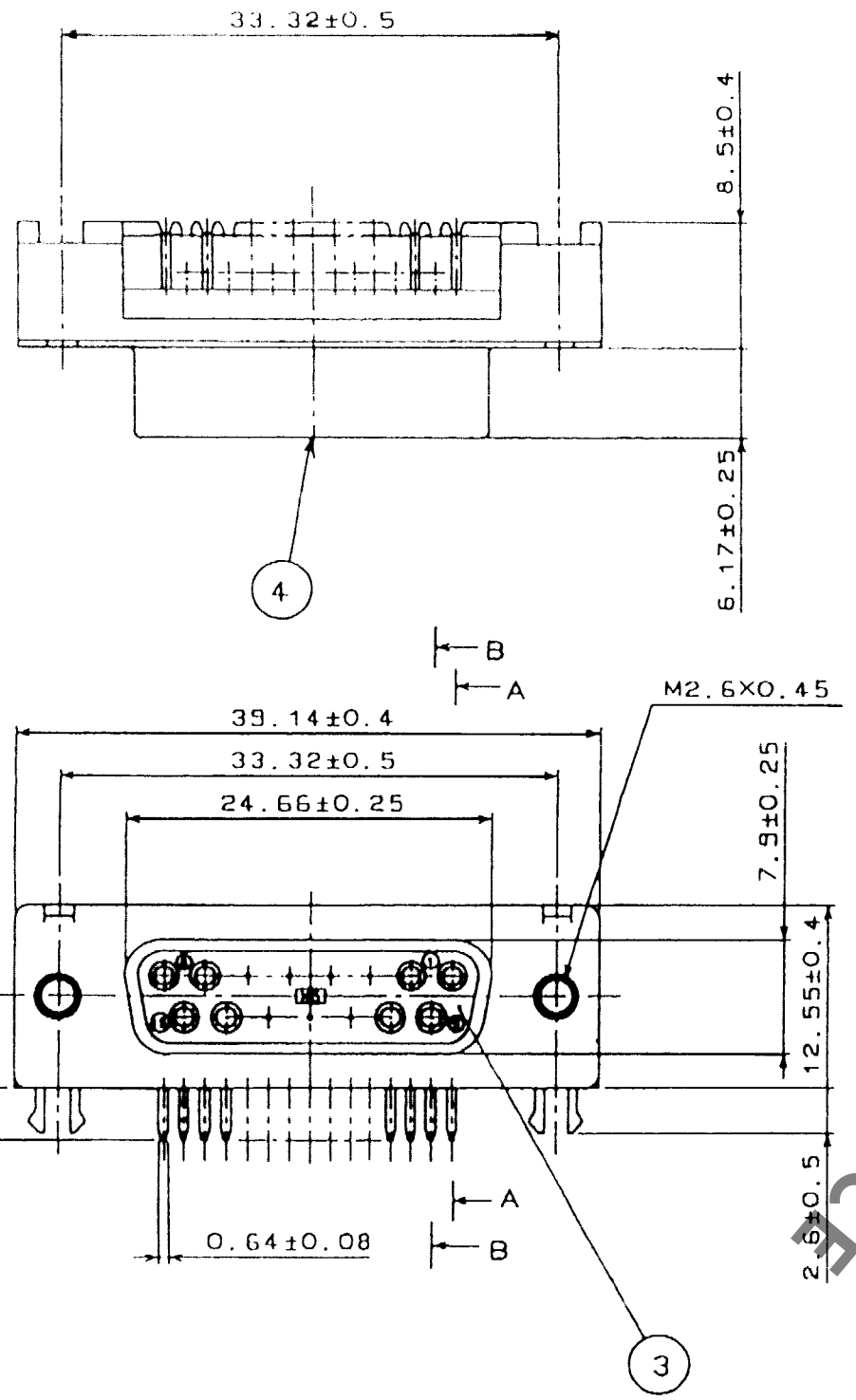

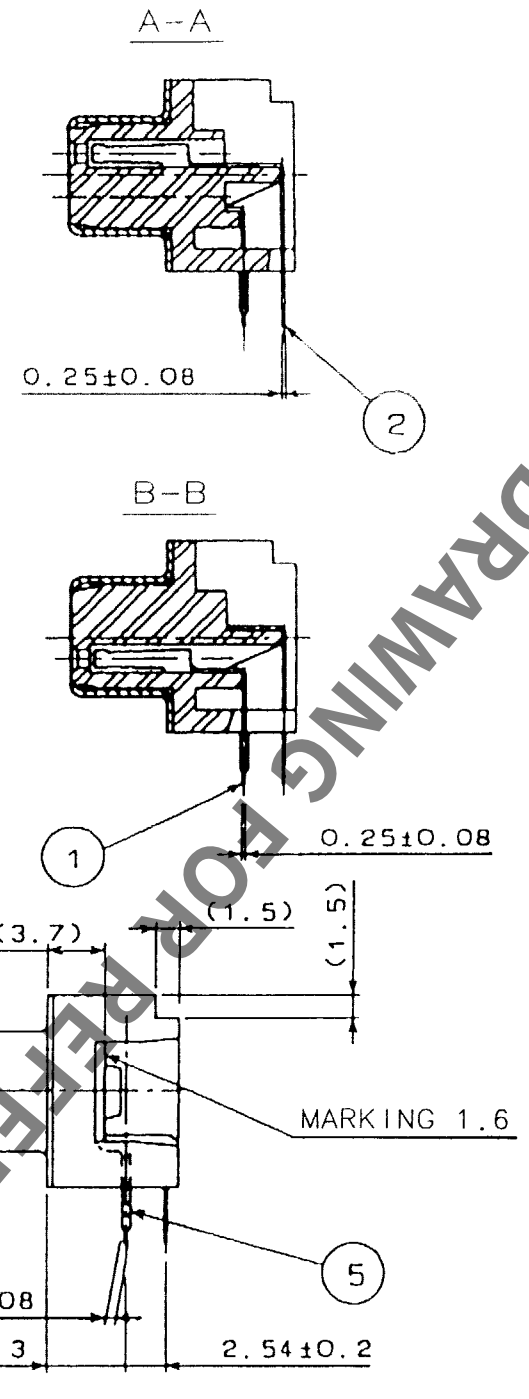

RECOMMENDED PC BOARD HOLE PATTERN
(SCALE 1/1)

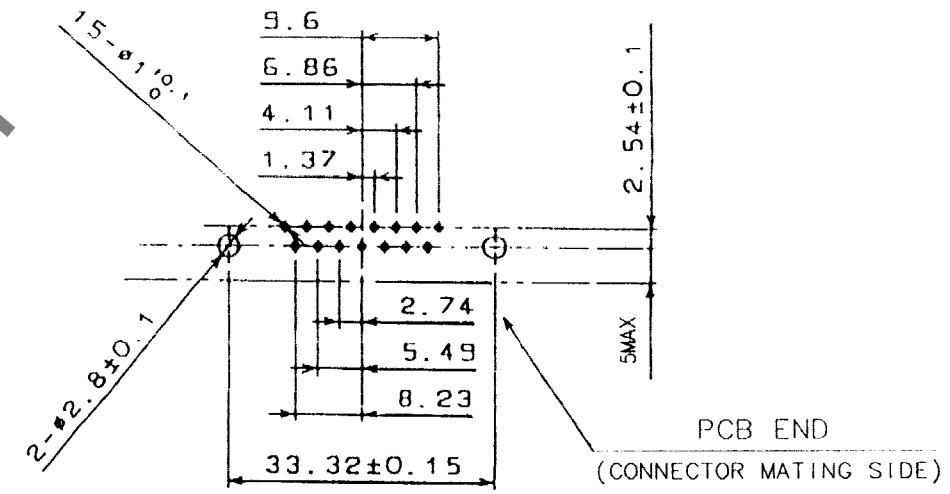

NOTES
1. PLEASE KEEP THE TOLERANCE TO LESS THAN ±0.1 FOR THE DIMENSIONS WITHOUT TOLERANCE.
2. THICKNESS OF PC BOARD SHALL BE 1.6mm.
3. REF.NO. 3 AND 4 SHALL BE TEMPORARILY.
   REF.NO. 3 AND 5 SHALL BE TEMPORARILY.
4. LOCK SCREW SHALL BE SOLD SEPARATELY.

HRS DRAWING FOR REFERENCE

NO.	MATERIAL	FINISH, REMARKS	NO.	MATERIAL	FINISH, REMARKS
3	PBT	UL94V-0(BLACK)			
2	PHOSPHOR BRONZE	SELECTIVE GOLD PLATING 0.2μm	5	BRASS	TIN PLATING
1	PHOSPHOR BRONZE	SELECTIVE GOLD PLATING 0.2μm	4	STEEL	NICKEL PLATING

CODE NO.(OLD)	DRAWN	DESIGNED	CHECKED	APPROVED	RELEASED
CL	O.Yoneyama 03.8.26	O.Yoneyama 03.8.26	Y. Enami 03.08.26	K.Miwa 03.08.28	. .

SCALE 2 : 1	DRAWING NO. EDC3-045290-01	PART NO. RDAG-15SE1(50)
UNITS mm	HRS HIROSE ELECTRIC CO., LTD	CODE NO. CL211-5204-8-50 1/1

FORM NO.229

TO
Q