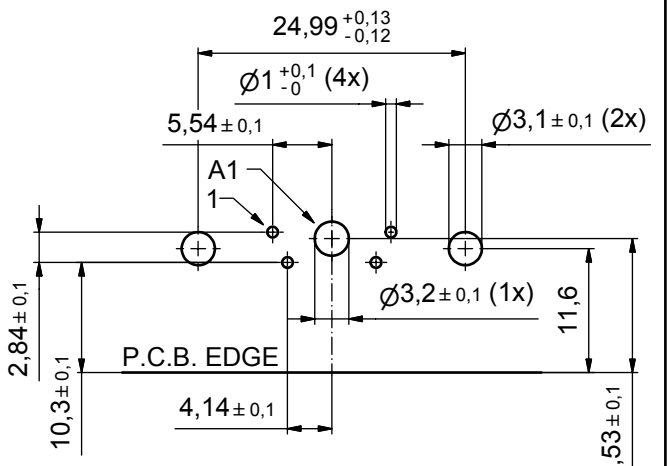

P.C.B. HOLE DRILLINGS
(P.C.B. TOP SIDE)

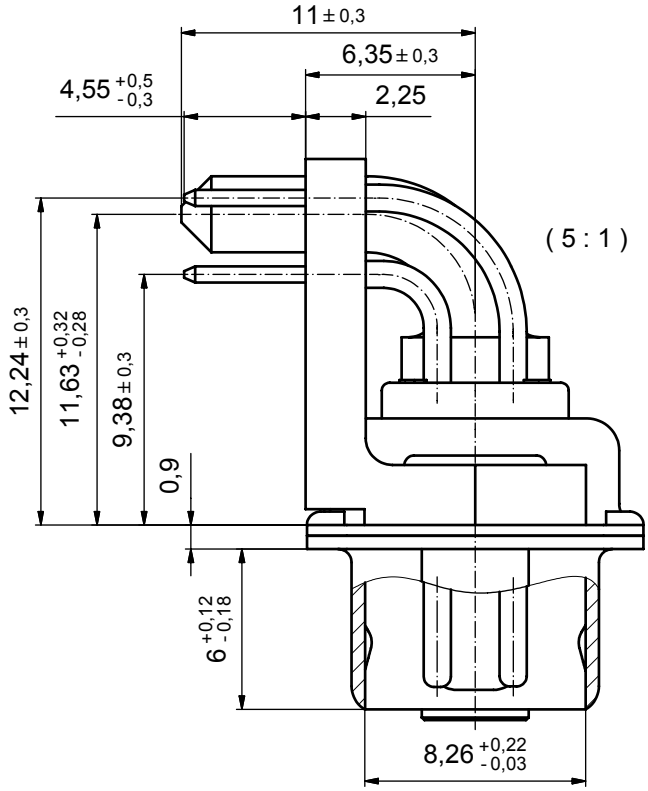

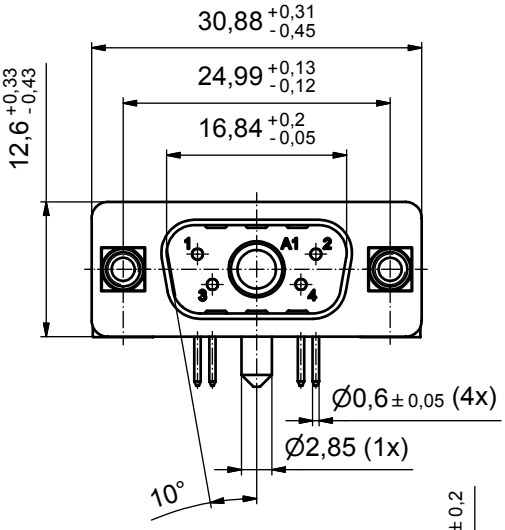

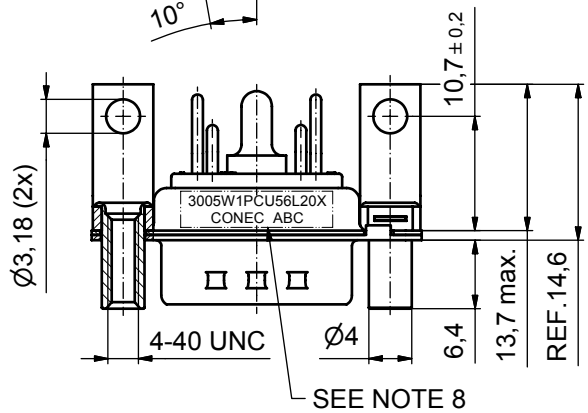

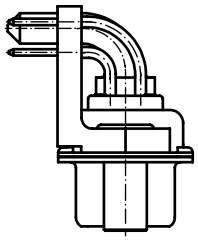

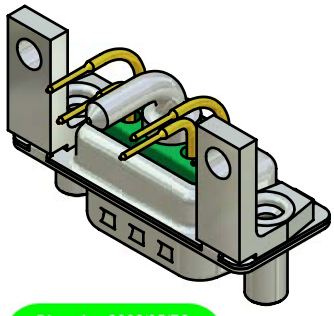

Directive 2002/95/EC
„RoHS“
Compliant

NOTES:

1. METALSHELLS: STEEL; min. 315µin TIN over 40-80µin NICKEL
2. INSULATORS: PBT GF UL 94 V-0, GREEN
3. SIGNAL CONTACTS: COPPER ALLOY
   PLATING: 30µin HARD GOLD over min. 50µin NICKEL
4. HIGH POWER CONTACT 20A: COPPER ALLOY
   PLATING MATING AREA: 30µin HARD GOLD over min. 50µin NICKEL
   PLATING TERMINATION SIDE: 160-240µin TIN over 80µin NICKEL
5. METAL BRACKETS: ZINC DIE CAST; 300µin COPPER/ 40-120µin NICKEL/ 120-200µin TIN
6. THREADED LOCKS: COPPER ALLOY; min. 200µin TIN over 80µin NICKEL
7. MAXIMUM TORQUE VALUE FOR THREAD: 6 in.LB
8. CONNECTOR IS PART MARKED: 3005W1PCU56L20X CONEC ABC

APPROVAL # FREIGABE # DEBLOCAGE # AUTORIZACION # APPROVAL
CUSTOMER APPROVAL DATE:
NAME: TITLE:
COMPANY NAME:
APPROVAL # FREIGABE # DEBLOCAGE # AUTORIZACION # APPROVAL

THIS DRAWING MAY NOT BE COPIED OR REPRODUCED IN ANY WAY, AND MAY NOT BE PASSED ON TO A THIRD PARTY WITHOUT WRITTEN PERMISSION. OWNERSHIP AND COPYRIGHT OF CONEC GmbH

DO NOT ALTER CAD DRAWING BY HAND

rev.	description	date	name
a	Origin		

tolerance
dim. in mm

	date	name
drawn	29.09.09	Lehmenkühler
appd.	29.09.09	Koch
norm		
d-old		

CONEC®

scale: 2:1 (5:1)
material: SEE NOTES
title: D-SUB COMBINATION MALE 90°
5W1P
with threaded lock and metal bracket
dwg no: 13K1A2949
Inventor 10
DIN-A3
sh: 1
part no: 3005W1PCU56L20X