THIS DRAWING IS UNPUBLISHED. RELEASED FOR PUBLICATION 20
© COPYRIGHT 20 BY - ALL RIGHTS RESERVED.

REVISIONS

P	LTR	DESCRIPTION	DATE	DWN	APVD
	A	INITIAL RELEASE	07MAY2015	DL	CW
	B	ECR-20-009510	28DEC2020	BS	CW
	B1	ECR-21-105988	28JUL2021	BS	CW

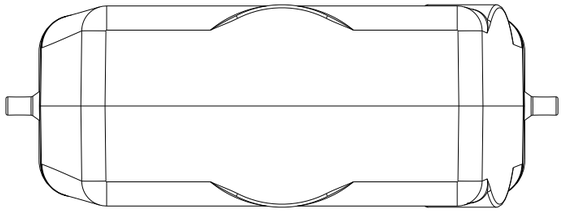

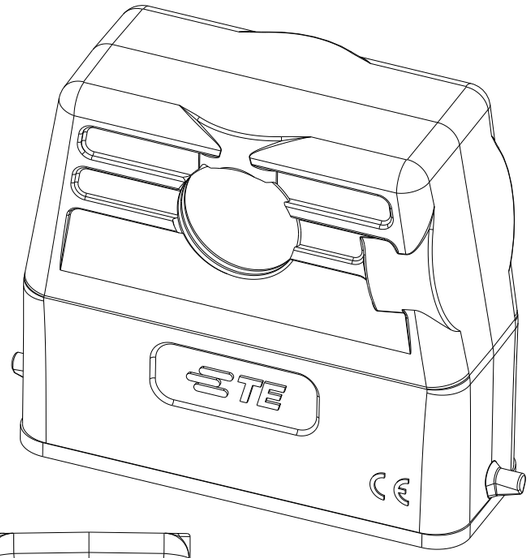

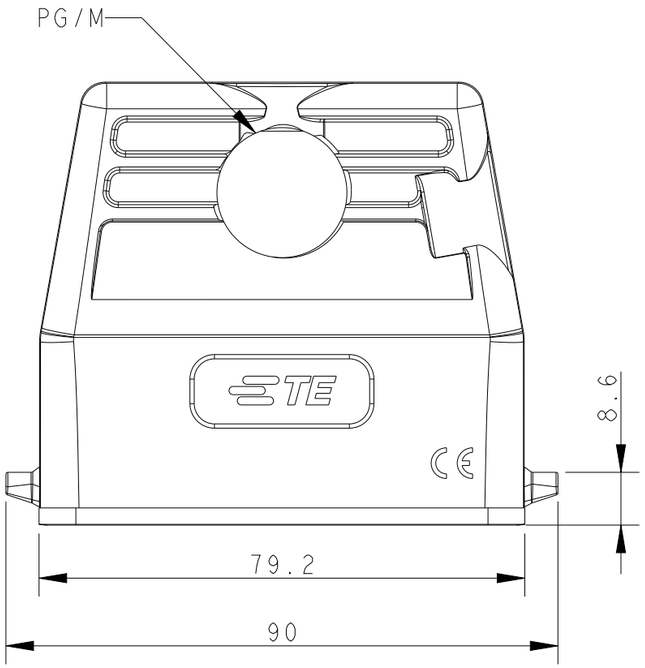

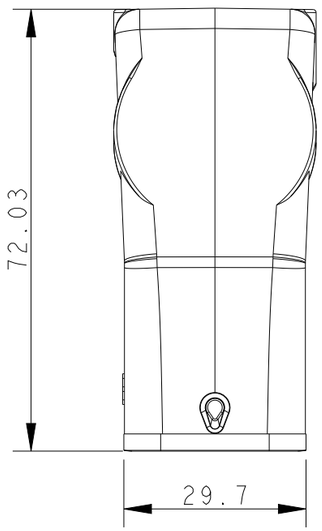

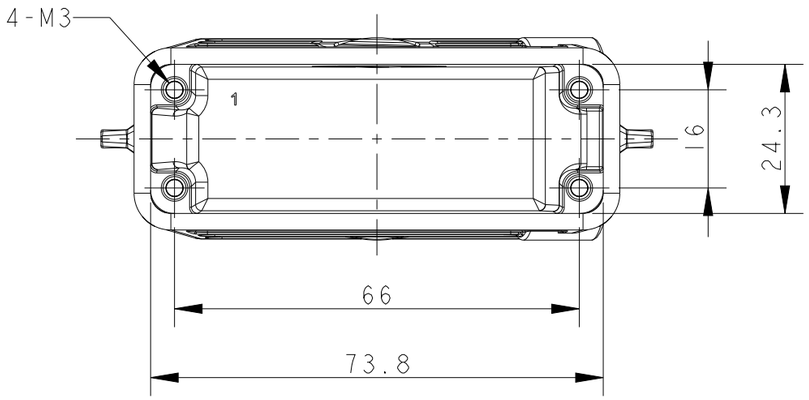

NOTES:
1. TECHNICAL CHARACTERISTICS:
   BODY MATERIAL: DIE CAST ALUMINIUM ALLOY
   SURFACE TREATMENT: POWDER-COATED, GRAY
   DEGREE OF PROTECTION: IP65 (MATED)

注释：
1. 技术参数：
   主体材料： 铝合金
   表面处理： 粉末喷涂， 灰色
   防护等级： IP65(配合)

T13X9160116-000	H16A-TSH-PG16	PG16
ASSEMBLY PART NUMBER	ASSEMBLY PART DESCRIPTION	PG/M

THIS DRAWING IS A CONTROLLED DOCUMENT.

DIMENSIONS: mm

TOLERANCES UNLESS OTHERWISE SPECIFIED:
0 PLC ±-
1 PLC ±-
2 PLC ±-
3 PLC ±-
4 PLC ±-
ANGLES ±-

MATERIAL - -

FINISH - -

DWN DAVID LI 07MAY2015
CHK CHRIS WANG 07MAY2015
APVD XU XIANG 07MAY2015
PRODUCT SPEC 108-137010
APPLICATION SPEC 114-137010
WEIGHT -

TE Connectivity

NAME H16A-TSH-PG16

SIZE	CAGE CODE	DRAWING NO	RESTRICTED TO
A3	-	C-T13X9160116000	

CUSTOMER DRAWING | SCALE 1:1 | SHEET 1 OF 1 | REV B1