THIS DRAWING IS UNPUBLISHED. RELEASED FOR PUBLICATION ,19 .
PUBLICATION NUMBER 108-40028 REVISION
© COPYRIGHT 19 BY AMP INCORPORATED. ALL RIGHTS RESERVED. (FOR NRA, SEE REVERSE)

LOC	DIST
F	7

REVISIONS

P	LTR REV	DESCRIPTION MODIFICATIONS	DATE	DWN DESS.	APVD APP.
	-	-	-	-	-

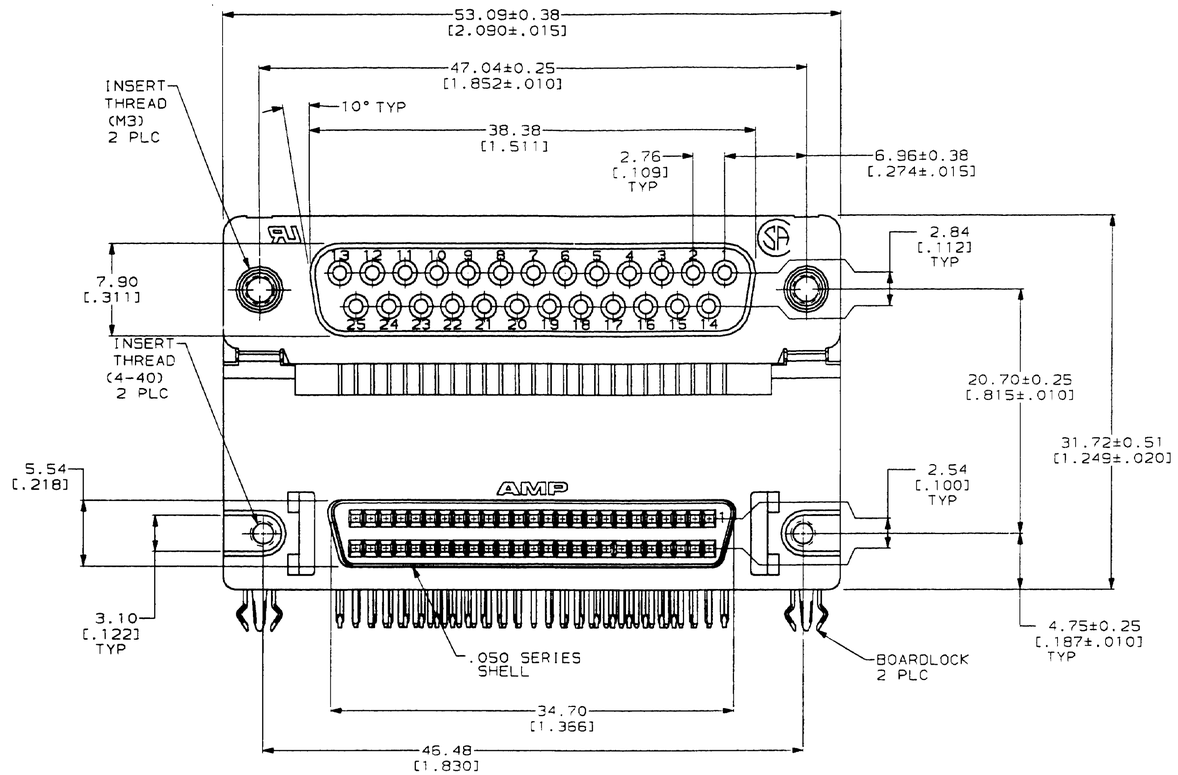

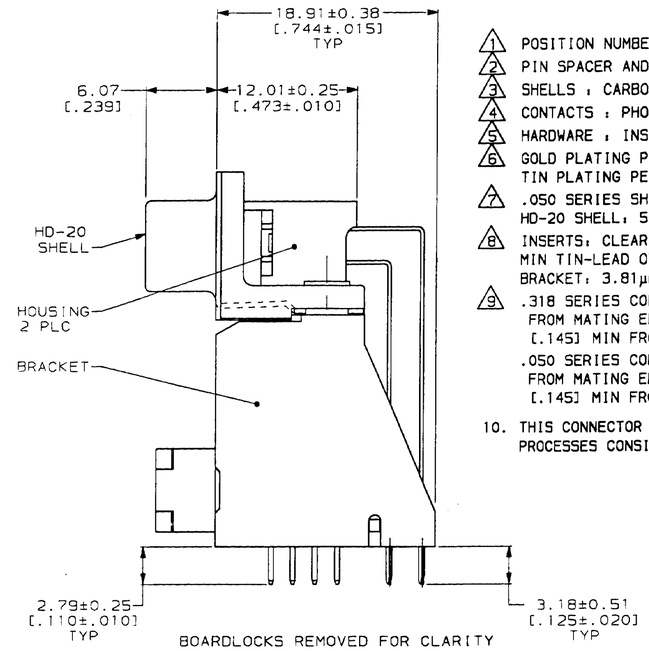

BOARDLOCKS REMOVED FOR CLARITY

1. POSITION NUMBERS SHOWN FOR REFERENCE ONLY.
2. PIN SPACER AND HOUSINGS : POLYESTER OR NYLON, UL 94V-0 RATED, GLASS FILLED, BLACK.
3. SHELLS : CARBON STEEL PER ASTM A109.
4. CONTACTS : PHOSPHOR BRONZE PER QQ-B-750.
5. HARDWARE : INSERTS & BRACKETS : ZINC ; BOARDLOCKS : COPPER ALLOY.
6. GOLD PLATING PER MIL-G-45204, NICKEL PLATING PER QQ-N-290, TIN PLATING PER MIL-T-10727, COPPER PLATING PER MIL-C-14550.
7. .050 SERIES SHELL: 5.08µm [.000200] MIN TIN OVER 2.54µm [.000100] MIN COPPER. HD-20 SHELL: 5.08µm [.000200] MIN TIN OVER 1.27µm [.000050] MIN COPPER.
8. INSERTS: CLEAR CHROMATE, EXCEPT IN THREADED ZONE; BOARDLOCKS: 5.08µm[.000200] MIN TIN-LEAD OVER 1.27µm[.000050] MIN NICKEL. BRACKET: 3.81µm [.000150] MIN NICKEL OVER 5.08µm [.000200] MIN COPPER.
9. .318 SERIES CONTACTS: 0.76µm [.000030] MIN GOLD FOR A LENGTH OF 1.52 [.060] MIN FROM MATING END, 3.05µm [.000120] MIN TIN-LEAD FOR A LENGTH OF 3.68 [.145] MIN FROM OPPOSITE END, BOTH OVER 1.27µm [.000050] MIN NICKEL.
   .050 SERIES CONTACT: 0.76µm [.000030] MIN GOLD FOR A LENGTH OF 0.64 [.025] MIN FROM MATING END, 3.81µm [.000150] MIN TIN-LEAD FOR A LENGTH OF 3.68 [.145] MIN FROM OPPOSITE END, BOTH OVER 1.27µm [.000050] MIN NICKEL.
10. THIS CONNECTOR IS COMPATIBLE WITH TYPICAL SURFACE MOUNT SOLDERING PROCESSES CONSISTING OF 419°F MAX AND 1 MINUTE MAX EXPOSURE TIME.

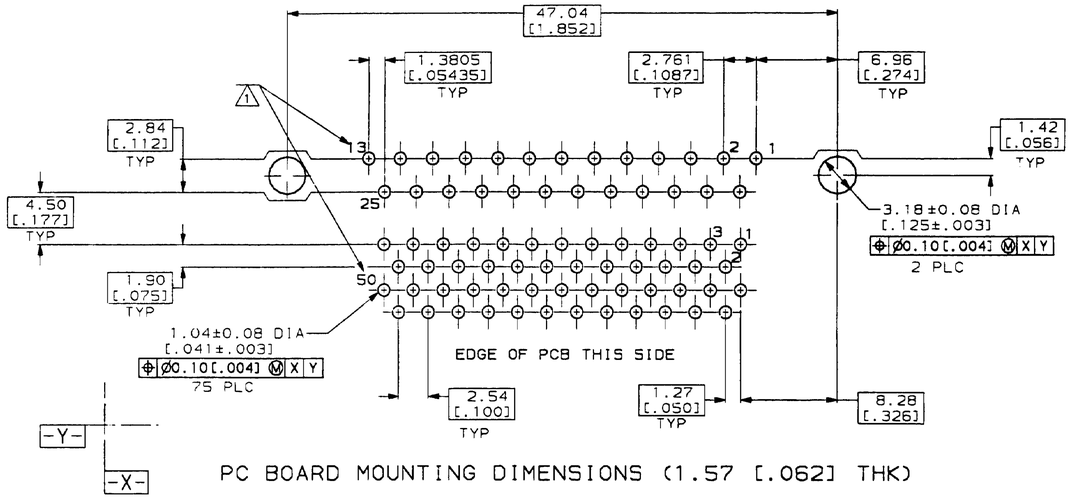

PC BOARD MOUNTING DIMENSIONS (1.57 [.062] THK)

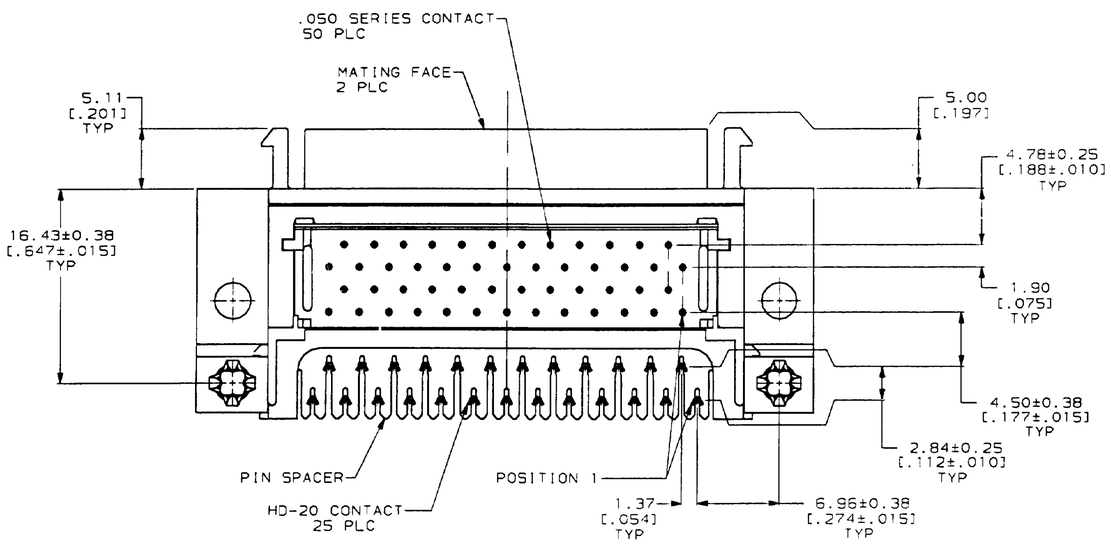

PART NUMBER : 185734-1

DIMENSIONS: mm	TOLERANCES UNLESS OTHERWISE SPECIFIED, TOLERANCES NON SPECIFIEES CRITY NE DE ORDINALEES: ±0.3 ANGLES ±5° FINITION FINITION	DWN/DESSINE 03-JUL-96 SACCOCI ROBERT; CHK/VERIFIE 05 JUL 96 G. ROBERT; APVD/APPROUVE 05 JUL 96 Y. PETRONIN; PRODUCT SPEC PRODUIT 108-40028; APPLICATION SPEC APPLICATION 114-40017; WEIGHT MASSE APPROX. —	AMP — AMP DE FRANCE 95301 PONTOISE
MATERIAL MATIERE 2 to 5	6 to 9		NAME TITRE: STACKED ASSEMBLY, HYBRID SIZE 3, 25 POSN, HD-20, RCPT OVER 50 POSN, .050 SERIES, RCPT, AMPLIMITE, METRIC THREADED
			SIZE FORMAT A1; CAGE CODE 00779; DRAWING NO No PLAN C-185734
			CUSTOMER DRAWING/PLAN CLIENT; UNTOUCHED POUR REFERENCE; SCALE ECHELLE 4:1; SHEET FEUILLE 1 OF 1; REV 0

AMP-400B REV 10/93