Customer Information Sheet

DRAWING No.: S70-332002045R	IF IN DOUBT - ASK	©	NOT TO SCALE	THIRD ANGLE PROJECTION	ALL DIMENSIONS IN mm

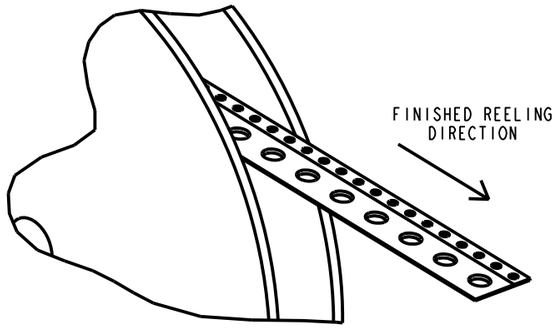

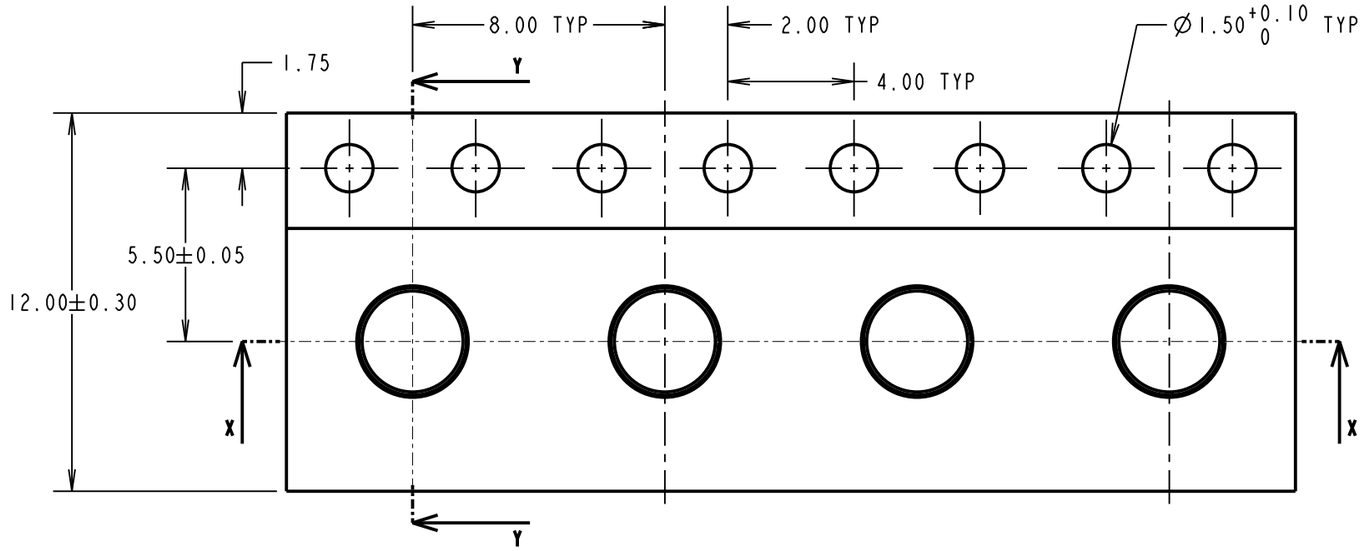

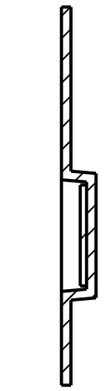

SECTION Y-Y

COMPONENT DETAILS

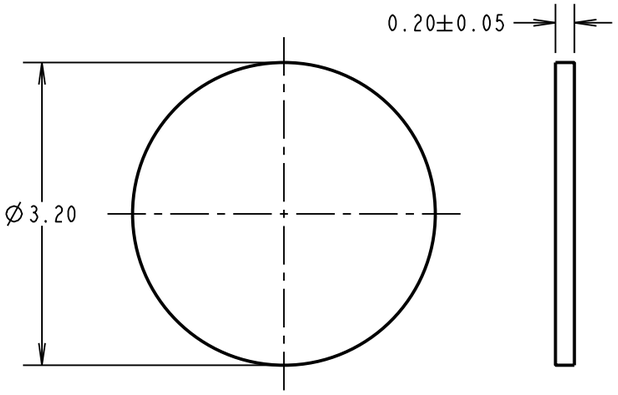

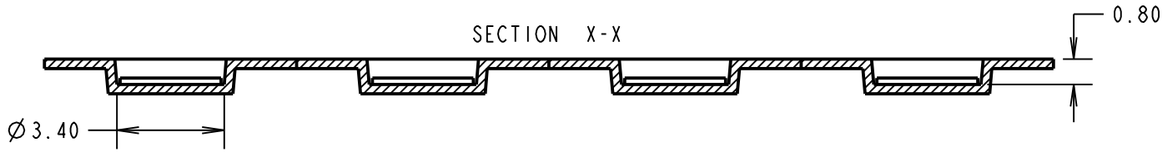

RECOMMENDED PCB LAYOUT

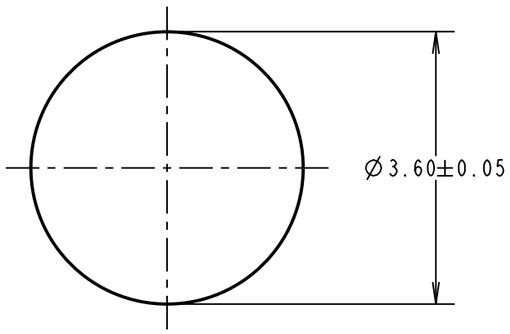

REEL DETAILS

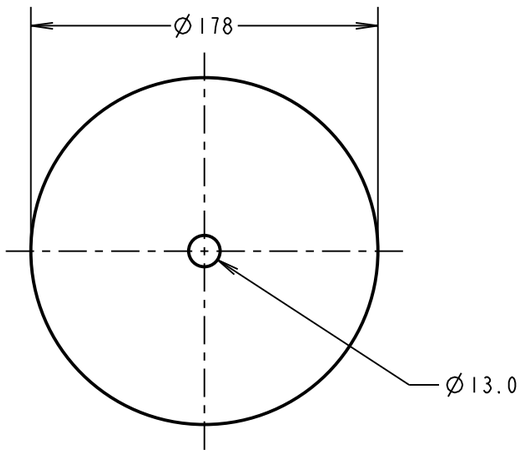

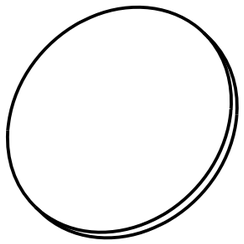

SPECIFICATIONS:
- FINISH:
  - 0.025µm - 0.075µm GOLD OVER 1.5µm - 3.0µm NICKEL
- ELECTRICAL:
  - CURRENT RATING = 6.0A
  - CONTACT RESISTANCE = 0.15mΩ MAX
- ENVIRONMENTAL:
  - OPERATING TEMPERATURE = -40°C TO +180°C
- PACKING:
  - QUANTITY: 2000 PER REEL

NOTES:
1. QUANTITY OF COMPONENTS PER REEL = 2000.
2. PRODUCT IS TAPE AND REELED IN GENERAL ACCORDANCE WITH EIA-481.

NAME	ISS.	DATE	C/NOTE
RA	5	20.02.20	22028
APPROVED:	R.ALEXANDER		
CHECKED:	R.PORTLOCK		
DRAWN:	M.PERREN		
CUSTOMER REF.:			
ASSEMBLY DRG:			

HARWIN

www.harwin.com
technical@harwin.com

THIS DRAWING AND ANY INFORMATION OR DESCRIPTIVE MATTER SET OUT HEREON ARE CONFIDENTIAL AND COPYRIGHT PROPERTY OF THE HARWIN GROUP AND MUST NOT BE DISCLOSED, LOANED, COPIED OR USED FOR MANUFACTURING, TENDERING OR FOR ANY OTHER PURPOSE WITHOUT THEIR WRITTEN PERMISSION.

TOLERANCES
X. = ±1mm
X.X = ±0.50mm
X.XX = ±0.20mm
X.XXX = ±0.01mm
ANGLES = ±5°
UNLESS STATED

MATERIAL: BERYLLIUM COPPER

FINISH: SEE ABOVE

S/AREA: 18.1 mm²

TITLE: SMT CIRCULAR CONTACT PAD

DRAWING NUMBER: S70-332002045R

SHT 2 OF 2