THIS DRAWING IS UNPUBLISHED. RELEASED FOR PUBLICATION -,- .
© COPYRIGHT - By - ALL RIGHTS RESERVED.

REVISIONS					
P	LTR	DESCRIPTION	DATE	DWN	APVD
	L3	PART STATUS UPATED IN PART LIST TABLE	09FEB2018	SD	PS

1. THE NOTED DIMENSIONS APPLY AT THE INTERSECTION OF THE POST AND HOUSING
2. POINT OF MEASUREMENT FOR PLATING THICKNESS
3. FINISH: POSTS:.000015 GOLD IN CONTACT AREA, .000100–.000200 MATTE TIN–LEAD ON SOLDER TAIL, ALL OVER .000050 NICKEL
4. FINISH: POSTS:.000015 GOLD IN CONTACT AREA, .000100–.000200 MATTE TIN ON SOLDER TAIL, ALL OVER .000050 NICKEL
5. MATERIALS: HOUSING– FLAME RETARDANT THERMOPLASTIC, COLOR–BLACK
   POSTS– PHOS BRONZE
6. OBSOLETE PARTS: OBSOLETE CIS STREAMLINING PER D.RENAUD/D.SINISI

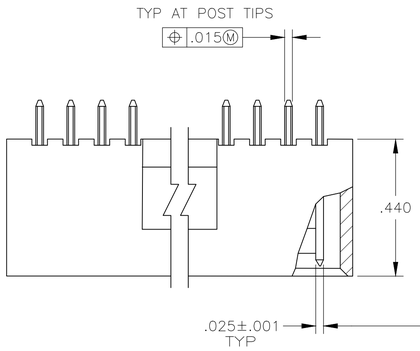

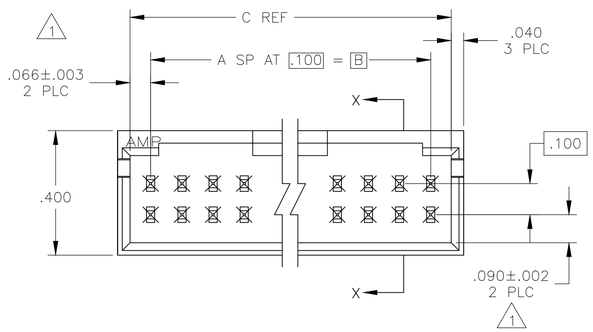

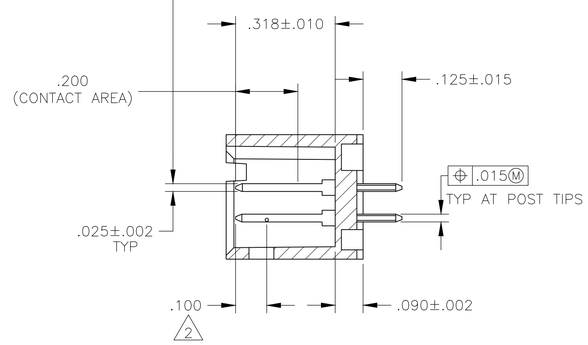

SECT X–X

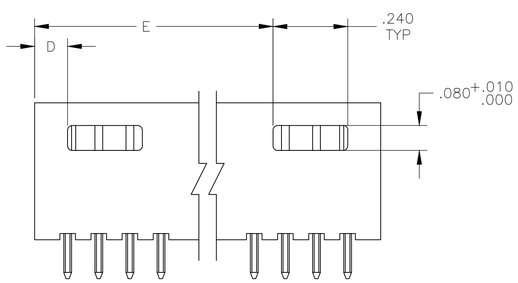

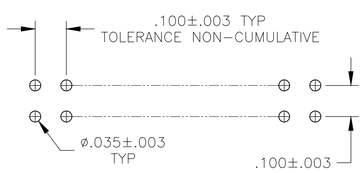

RECOMENDED HOLE LAYOUT

	PLATING	E	D	C	B	A	NO. OF POSN	ASSEMBLY PART NUMBER
OBSOLETE 6	4	3.506	.106	3.732	3.600	36	74	~~8–102618–5~~
	4	3.406	.106	3.632	3.500	35	72	~~8–102618–4~~
	4	3.306	.106	3.532	3.400	34	70	~~8–102618–3~~
	4	3.206	.106	3.432	3.300	33	68	~~8–102618–2~~
	4	3.106	.106	3.332	3.200	32	66	~~8–102618–1~~
	4	3.006	.106	3.232	3.100	31	64	~~8–102618–0~~
	4	2.906	.106	3.132	3.000	30	62	~~7–102618–9~~
	4	2.806	.106	3.032	2.900	29	60	7–102618–8
OBSOLETE 6	4	2.706	.106	2.932	2.800	28	58	~~7–102618–7~~
	4	2.606	.106	2.832	2.700	27	56	~~7–102618–6~~
	4	2.506	.106	2.732	2.600	26	54	~~7–102618–5~~
	4	2.406	.106	2.632	2.500	25	52	~~7–102618–4~~
	4	2.306	.106	2.532	2.400	24	50	7–102618–3
OBSOLETE 6	4	2.206	.106	2.432	2.300	23	48	~~7–102618–2~~
	4	2.106	.106	2.332	2.200	22	46	~~7–102618–1~~
	4	2.006	.106	2.232	2.100	21	44	~~7–102618–0~~
	4	1.906	.106	2.132	2.000	20	42	6–102618–9
	4	1.806	.106	2.032	1.900	19	40	6–102618–8
OBSOLETE 6	4	1.706	.106	1.932	1.800	18	38	~~6–102618–7~~
	4	1.606	.106	1.832	1.700	17	36	~~6–102618–6~~
	4	1.506	.106	1.732	1.600	16	34	6–102618–5
OBSOLETE 6	4	1.406	.106	1.632	1.500	15	32	~~6–102618–4~~
	4	1.306	.106	1.532	1.400	14	30	6–102618–3
	4	1.206	.106	1.432	1.300	13	28	6–102618–2
	4	1.106	.106	1.332	1.200	12	26	6–102618–1
	4	1.006	.106	1.232	1.100	11	24	6–102618–0
	4	.906	.106	1.132	1.000	10	22	5–102618–9
	4	.806	.106	1.032	.900	9	20	5–102618–8
	4	—	.406	.932	.800	8	18	5–102618–7
	4	—	.306	.832	.700	7	16	5–102618–6
	4	—	.306	.732	.600	6	14	5–102618–5
	4	—	.206	.632	.500	5	12	5–102618–4
	4	—	.206	.532	.400	4	10	5–102618–3
	4	—	.106	.432	.300	3	8	5–102618–2
	4	—	.106	.332	.200	2	6	5–102618–1
OBSOLETE 6	3	3.506	.106	3.732	3.600	36	74	~~3–102618–5~~
	3	3.406	.106	3.632	3.500	35	72	~~3–102618–4~~
	3	3.306	.106	3.532	3.400	34	70	~~3–102618–3~~
	3	3.206	.106	3.432	3.300	33	68	~~3–102618–2~~
	3	3.106	.106	3.332	3.200	32	66	~~3–102618–1~~
	3	3.006	.106	3.232	3.100	31	64	~~3–102618–0~~
	3	2.906	.106	3.132	3.000	30	62	~~2–102618–9~~
	3	2.806	.106	3.032	2.900	29	60	2–102618–8
OBSOLETE 6	3	2.706	.106	2.932	2.800	28	58	~~2–102618–7~~
	3	2.606	.106	2.832	2.700	27	56	~~2–102618–6~~
	3	2.506	.106	2.732	2.600	26	54	~~2–102618–5~~
	3	2.406	.106	2.632	2.500	25	52	~~2–102618–4~~
	3	2.306	.106	2.532	2.400	24	50	2–102618–3
OBSOLETE 6	3	2.206	.106	2.432	2.300	23	48	~~2–102618–2~~
	3	2.106	.106	2.332	2.200	22	46	~~2–102618–1~~
	3	2.006	.106	2.232	2.100	21	44	~~2–102618–0~~
	3	1.906	.106	2.132	2.000	20	42	~~1–102618–9~~
	3	1.806	.106	2.032	1.900	19	40	1–102618–8
OBSOLETE 6	3	1.706	.106	1.932	1.800	18	38	~~1–102618–7~~
	3	1.606	.106	1.832	1.700	17	36	~~1–102618–6~~
	3	1.506	.106	1.732	1.600	16	34	1–102618–5
	3	1.406	.106	1.632	1.500	15	32	1–102618–4
	3	1.306	.106	1.532	1.400	14	30	1–102618–3
	3	1.206	.106	1.432	1.300	13	28	1–102618–2
	3	1.106	.106	1.332	1.200	12	26	1–102618–1
	3	1.006	.106	1.232	1.100	11	24	1–102618–0
SUP BY 5–102618–9	3	.906	.106	1.132	1.000	10	22	~~102618–9~~
	3	.806	.106	1.032	.900	9	20	102618–8
	3	—	.406	.932	.800	8	18	102618–7
	3	—	.306	.832	.700	7	16	102618–6
	3	—	.306	.732	.600	6	14	102618–5
	3	—	.206	.632	.500	5	12	102618–4
	3	—	.206	.532	.400	4	10	102618–3
	3	—	.106	.432	.300	3	8	102618–2
	3	—	.106	.332	.200	2	6	102618–1

THIS DRAWING IS A CONTROLLED DOCUMENT.

DIMENSIONS: INCHES

TOLERANCES UNLESS OTHERWISE SPECIFIED:
0 PLC ± –
1 PLC ± –
2 PLC ± –
3 PLC ± .005
4 PLC ± –
ANGLES ± –

MATERIAL 5

FINISH SEE TABLE

DWN H MOLL 4–9–87
CHK LA MAYER 4–9–87
APVD R. FEIDT 4–9–87
PRODUCT SPEC —
APPLICATION SPEC —
WEIGHT —

TE Connectivity

NAME ASSEMBLY, HEADER, MOD II, .025 SQ POST, DBL ROW, .100 X .100 C/L WITH DETENTS
–

SIZE	CAGE CODE	DRAWING NO	RESTRICTED TO
A1	00779	C–102618	—

CUSTOMER DRAWING SCALE 4:1 SHEET 1 OF 1 REV L3

4805 (1/15)