| REV. | ECN NO. | DATE | SIGN | DESCRIPTION |
|---|---|---|---|---|
| B | C200383 | 2020-03-28 | Peng | B X1 |
| | | | | |
| | | | | |

SAM20D- XXG03

B

01:MPQ(3500PCS)/REEL
02:LOOSE PIECE 500PCS
03:LOOSE PIECE 100PCS

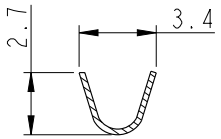


SECTION A-A

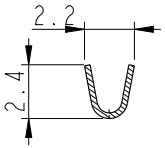


SECTION B-B

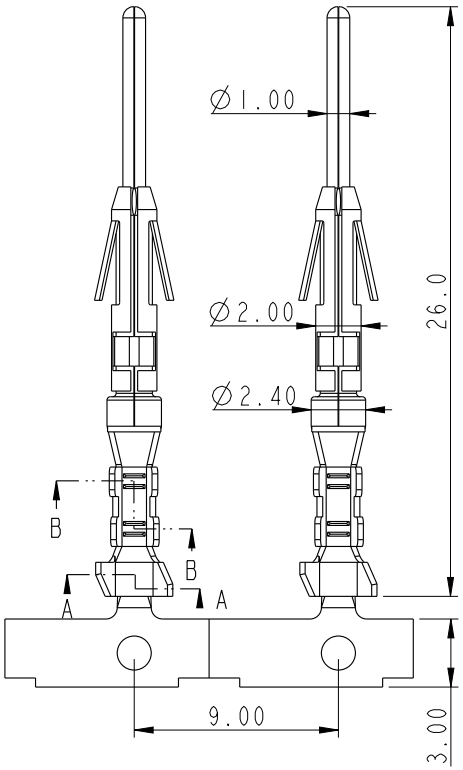


Note:
* Material
  Contact Body: Copper Alloy
  Outer Spring: Stainless steel
* Contact Finish: 3u"Min Gold Plating
* Current Rating: 5A Max
* Termination Type: Crimping
* Wire Range: 24AWG~20AWG
* Salt Spray Test 48H
* This drawing is supplied for information only design features specifications and performance data

| | | | | | |
|---|---|---|---|---|---|
| UNIT:mm | TITLE: 05A MALE CLAW PIN TERMINAL | | ITEM NO | DRAWN BY: Jinhai | DATE: 2015-08-11 |
| TOLERANCE: ±0.5 | SCALE: 3:1 / SIZE: A4 / SHEET: 1 OF 1 | Amphenol LTW 安費諾亮泰企業股份有限公司 | DWG NO: SAM20D-XXG03 | CHECKED BY: Rensong | DATE: 2015-08-11 |
| | REV.: B / WC-REV.: A.3 / QC: Inspection item | | CUSTOMER: ALTW | APPROVED BY: Jerry | DATE: 2015-08-11 |

THIS DOCUMENT IS SUBJECT TO CHANGE WITHOUT NOTICE. IT IS CONFIDENTIAL AND A PROPERTY OF Amphenol LTW. DISCLOSURE TO THIRD PARTY HAS TO BE AUTHORIZED BY Amphenol LTW.