THIS DRAWING IS UNPUBLISHED. RELEASED FOR PUBLICATION -
© COPYRIGHT - BY - ALL RIGHTS RESERVED.

| LOC | DIST |
|---|---|
| - | - |

REVISIONS

| P | LTR | DESCRIPTION | DATE | DWN | APVD |
|---|---|---|---|---|---|
| | U | REV PER ECO 16-003731 | 3-14-16 | CT | RG |

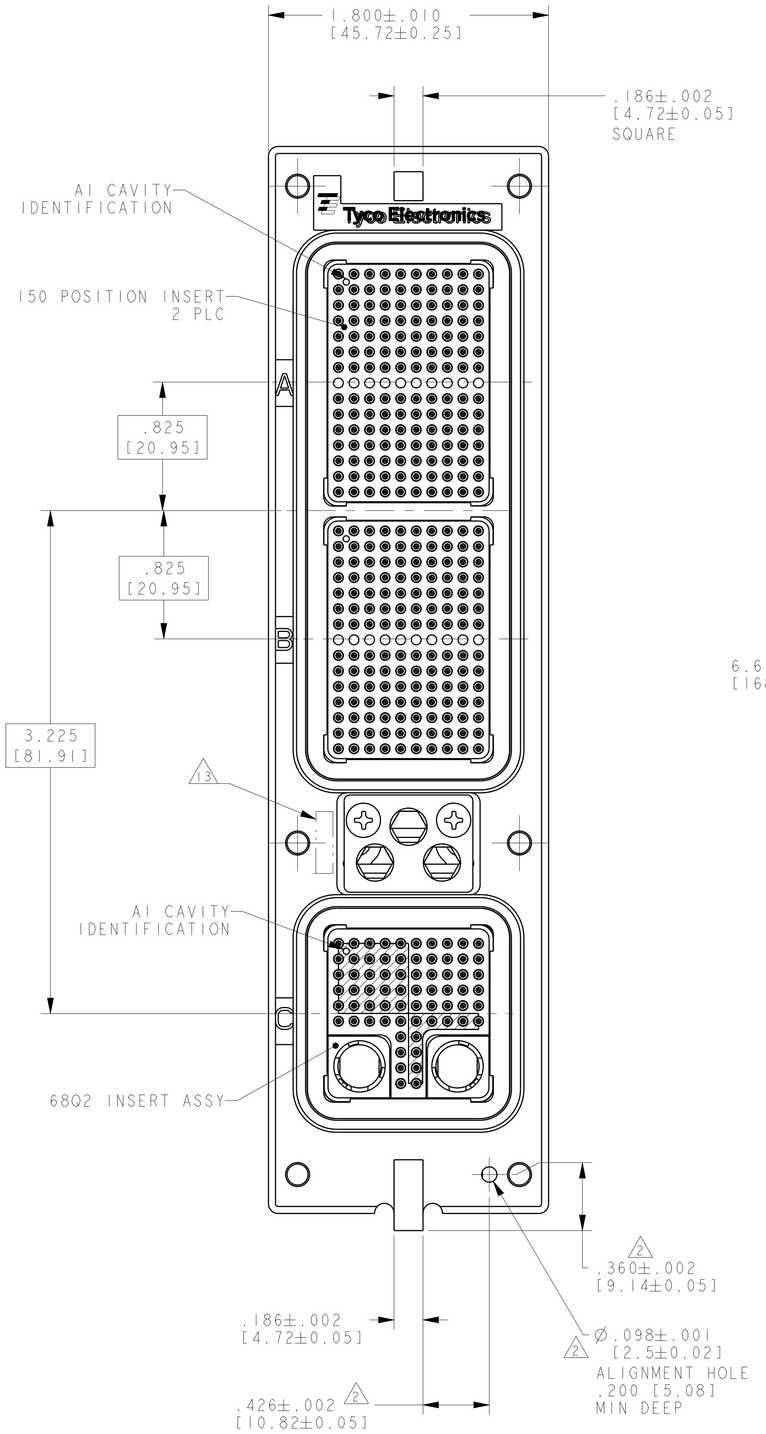


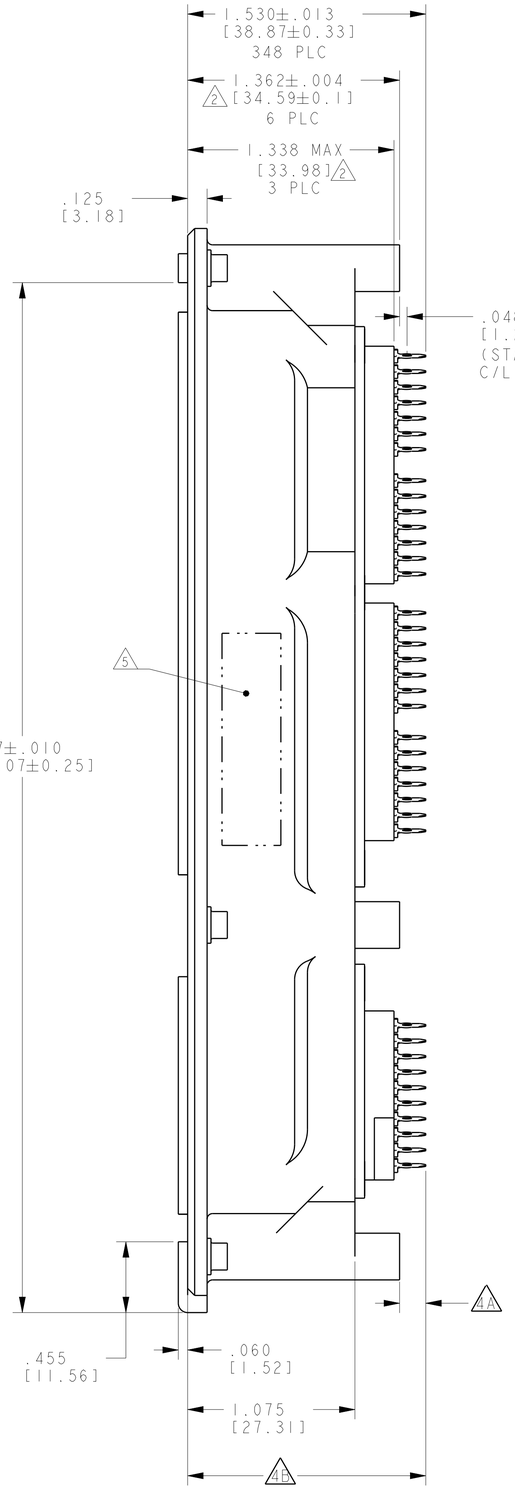


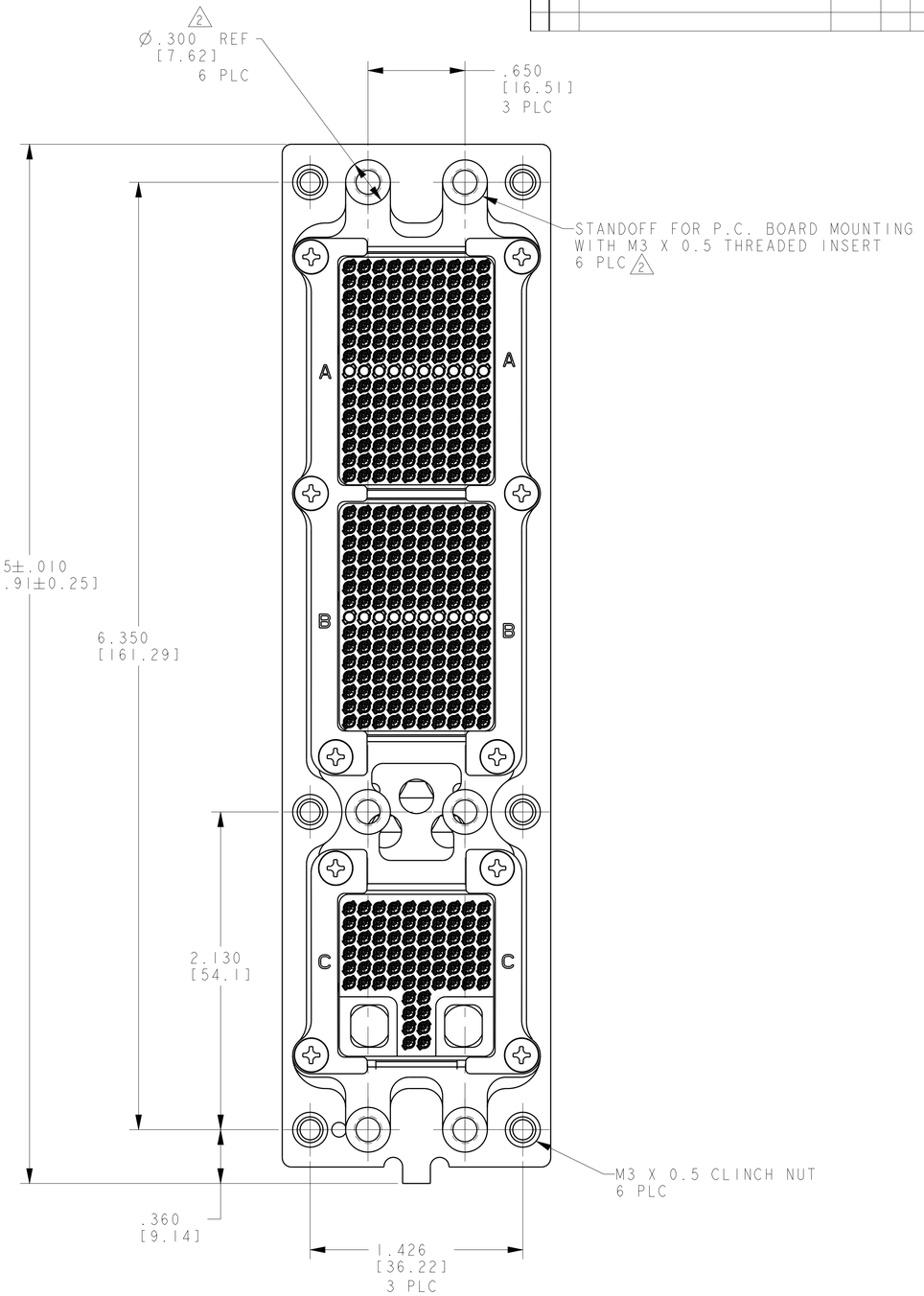


| | | | |
|---|---|---|---|
| | 348 | "00" | 2101004-4 |
| | 368 | "00" | 2101004-3 |
| | 348 | "00" | 2101004-2 |
| SUPERSEDED BY 2101004-2 | 348 | "00" | 2101004-1 |
| | SZ 22 CONTACT QUANITY | KEYING POSITION 10 | PART NO. |

THIS DRAWING IS A CONTROLLED DOCUMENT.

DIMENSIONS: INCHES[mm]

TOLERANCES UNLESS OTHERWISE SPECIFIED:
0 PLC ±-
1 PLC ±-
2 PLC ±-
3 PLC ±.005 [0.13]
4 PLC ±-
ANGLES ±-

MATERIAL - SEE CALLOUTS
FINISH - SEE CALLOUTS

DWN C.C.THOMAS 03NOV2008
CHK K.HOGAN 03NOV2008
APVD K.HOGAN 03NOV2008

PRODUCT SPEC -
APPLICATION SPEC -
WEIGHT -

TE Connectivity

NAME RECEPTACLE ASSEMBLY,SIZE 2,ARINC 600 WITH PRESS FIT CONTACTS (150/150/68Q2)

| SIZE | CAGE CODE | DRAWING NO | RESTRICTED TO |
|---|---|---|---|
| A1 | 00779 | C-2101004 | - |

CUSTOMER DRAWING | SCALE 2:1 | SHEET 1 OF 2 | REV U

4805 (3/11)

THIS DRAWING IS UNPUBLISHED. RELEASED FOR PUBLICATION -
© COPYRIGHT - BY - ALL RIGHTS RESERVED.

| LOC | DIST |
|---|---|
| - | - |

REVISIONS

| P | LTR | DESCRIPTION | DATE | DWN | APVD |
|---|---|---|---|---|---|
| | - | SEE SHEET 1 | - | - | - |

1. RECEPTACLE IS INTERMATEABLE TO ARINC 600 STYLE SIZE 2 PLUG ASSEMBLY
2. ASSEMBLED CONNECTOR FEATURES COMPLY WITH ARINC 600 SPECIFICATION EXCEPT AS NOTED.
3. ASSEMBLED CONNECTOR IS IN AGREEMENT, AS NOTED, WITH THALES TECHNICAL PROCUREMENT SPECIFICATION J54625AA-REV-02 AND CUSTOMER PURCHASING REQUIREMENTS SPECIFICATION 128-1089.
4. THE FOLLOWING POSTED QUADRAX PIN CONTACTS FOR THE 68Q2 INSERT ARE AVAILABLE BUT NOT INCLUDED, TE PART NO. 1445626-8
   THE CONTACTS ARE RoHs COMPLIANT AND Sn DIPPED.
   (4A) THE MINIMUM POST EXTENSION BEYOND STANDOFF IS: .190 [4.83].
   (4B) THE MAXIMUM POST EXTENSION FROM THE FRONT FACE IS: 1.624 [41.25]
5. MANUFACTURERS PART NO. AND DATE CODE (YY-WW) MARKED IN AREA SHOWN.
6. ESTIMATED WEIGHT OF CONNECTOR ASSEMBLY AS SHOWN: 290 GRAMS.
7. MAX LOCKING TORQUE FOR M3 CLINCH NUTS: 0.34 N-m (3.0 in-lbf)
   MAX LOCKING TORQUE FOR M3 THREADED INSERTS: 0.45 N-m (4.0 in-lbf)
   MAX LOCKING TORQUE IS VALID FOR FIRST CYCLE ONLY. MAX LOCKING TORQUE REFERS TO THE TORQUE REQUIRED TO OVERCOME THE LOCKING FEATURE OF THE CLINCH NUT OR THREADED INSERT. TORQUE VALUES ARE FOR REFERENCE ONLY.
8. CONDUCTIVE DUST COVER INSTALLED FOR SHIPPING. (NOT SHOWN)
9. EYE OF THE NEEDLE CONTACT DESIGN CONSIDERATIONS:
   (A) PCB HOLE DIAMETER: 0.90mm PER IEC 60352-5
   (B) MININUM PCB THICKNESS: .063 [1.6]
   (C) PCB PLATING: Sn PLATE RECOMMENDED
   (D) NORMAL INSERTION FORCE: 8 lb MAX PER CONTACT; 900 lb AVERAGE PER 150 POSITION INSERT ASSEMBLY
10. KEYING SHOWN IN POSITION "01" FOR REFERENCE ONLY. KEYING HARDWARE IS INCLUDED BUT SHIPPED UNASSEMBLED.
11. CONNECTOR PACKAGING SHALL HAVE A LABEL WHICH WILL INCLUDE, AT A MINIMUM, THE THALES PART NUMBER, THE TE PART NUMBER AND THE MANUFACTURING DATE CODE.
12. ~~RoHS CODE IS "L" AS DEFINED IN TEC-238-2 DUE TO HEXAVALENT CHROMATE CONVERSION FINISH ON SHELL AND RETAINER PLATES.~~
13. TE LOGO APPEARS IN THIS APPROXIMATE LOCATION ON SHELLS MACHINED FROM BILLET.
14. ASSEMBLY SHOWN WITH DIE-CAST SHELL. ASSEMBLIES WITH MACHINED SHELLS MAY VARY SLIGHTLY IN APPERANCE.

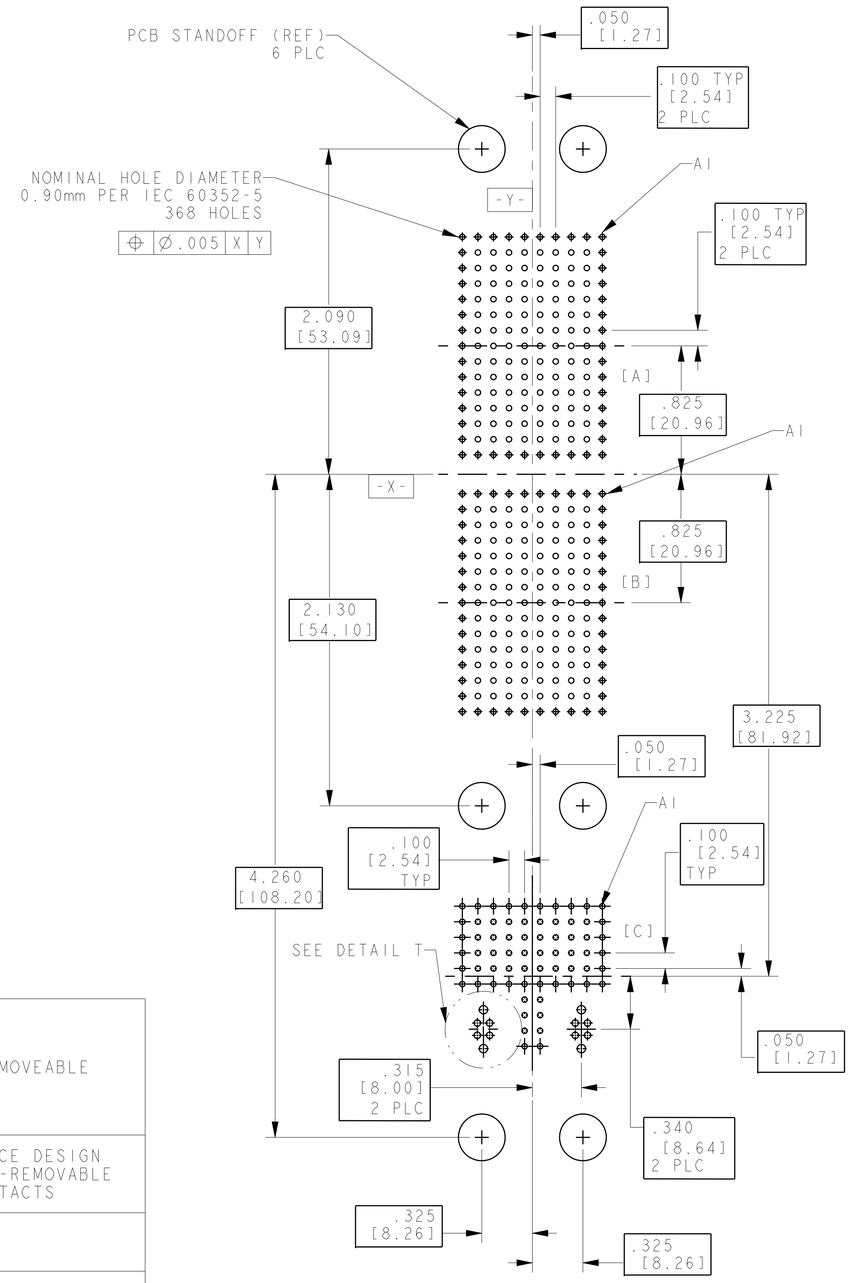


RECOMMENED P.C. BOARD LAYOUT
SCALE NTS
(BACK VIEW)

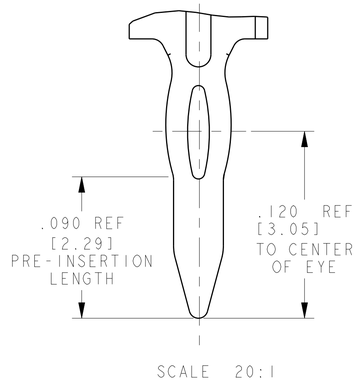


SCALE 20:1

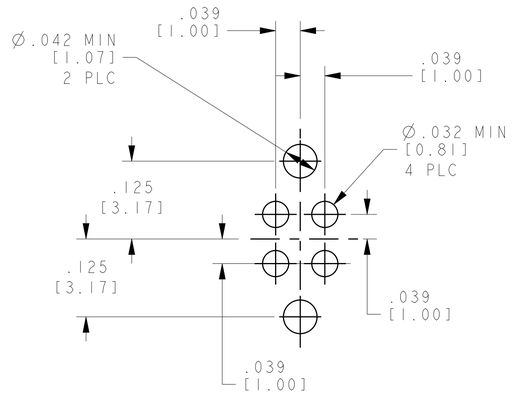


DETAIL T
SCALE: NTS
2 PLC

| COMPONENT | MATERIAL | FINISH | REMARKS |
|---|---|---|---|
| SIZE 22 SOCKET CONTACTS<br>QTY = 348 (-2)<br>QTY = 368 (-3) | BODY: COPPER ALLOY<br>HOOD: STAINLESS STEEL | BODY: .000050 [1.27um] MIN GOLD ON MATING TINES, Sn ON EON TAIL, BOTH OVER NICKEL PLATE 2<br>HOOD: PASSIVATED | NON REMOVEABLE |
| 150 POSITION INSERT<br>2 PLC | THERMOPLASTIC | NONE | ONE PIECE DESIGN WITH NON-REMOVABLE CONTACTS |
| M3 THREADED INSERT<br>6 PLC | STAINLESS STEEL | DRY FILM LUBRICANT | |
| M3 CLINCH NUT<br>6 PLC | STEEL | ZINC PLATED WITH SUPP YELLOW TRIVALENT CHROMATE | |
| 68Q2 INSERT ASSY | THERMOPLASTIC | NONE | SIGNAL CONTACTS NON-REMOVABLE QUADRAX CONTACTS FRONT RELEASE/REMOVE |
| SHELL & RETENTION PLATES | ALUMINUM ALLOY PER ASTM-B-85 OR ASTM B 211, 6061T6 OR ASTM B 209, 2024T4 | FOR -2 & -3 CHROMATE CONVERSION PER MIL-C-5541 TYPE I CLASS 1A<br>FOR -4 CHROMATE CONVERSION PER MIL-C-5541 TYPE II, CLASS 3 | |

THIS DRAWING IS A CONTROLLED DOCUMENT.

DIMENSIONS: INCHES[mm]

TOLERANCES UNLESS OTHERWISE SPECIFIED:
0 PLC ±-
1 PLC ±-
2 PLC ±-
3 PLC ±.005 [0.13]
4 PLC ±-
ANGLES ±-

MATERIAL - SEE CALLOUTS
FINISH - SEE CALLOUTS

| | | |
|---|---|---|
| DWN | C.C.THOMAS | 03NOV2008 |
| CHK | K.HOGAN | 03NOV2008 |
| APVD | K.HOGAN | 03NOV2008 |
| PRODUCT SPEC | - | |
| APPLICATION SPEC | - | |
| WEIGHT | - | |

TE Connectivity

NAME: RECEPTACLE ASSEMBLY,SIZE 2,ARINC 600 WITH PRESS FIT CONTACTS (150/150/68Q2)

| SIZE | CAGE CODE | DRAWING NO | RESTRICTED TO |
|---|---|---|---|
| A1 | 00779 | C-2101004 | - |

CUSTOMER DRAWING | SCALE 2:1 | SHEET 2 OF 2 | REV U

4805 (3/11)